Onshape CAD

Intro to Engineering Design

Criteria and Constraints

The main requirements for this project are:

+ Size and measurement accurate replication of the isometric drawings
+ Completion of all 20 drawings
+ Growing familiarity with Onshape tools

The main constraints for this project are:

- Time in and out of class to design
- Difficulty navigating the program for the first time

Design 01

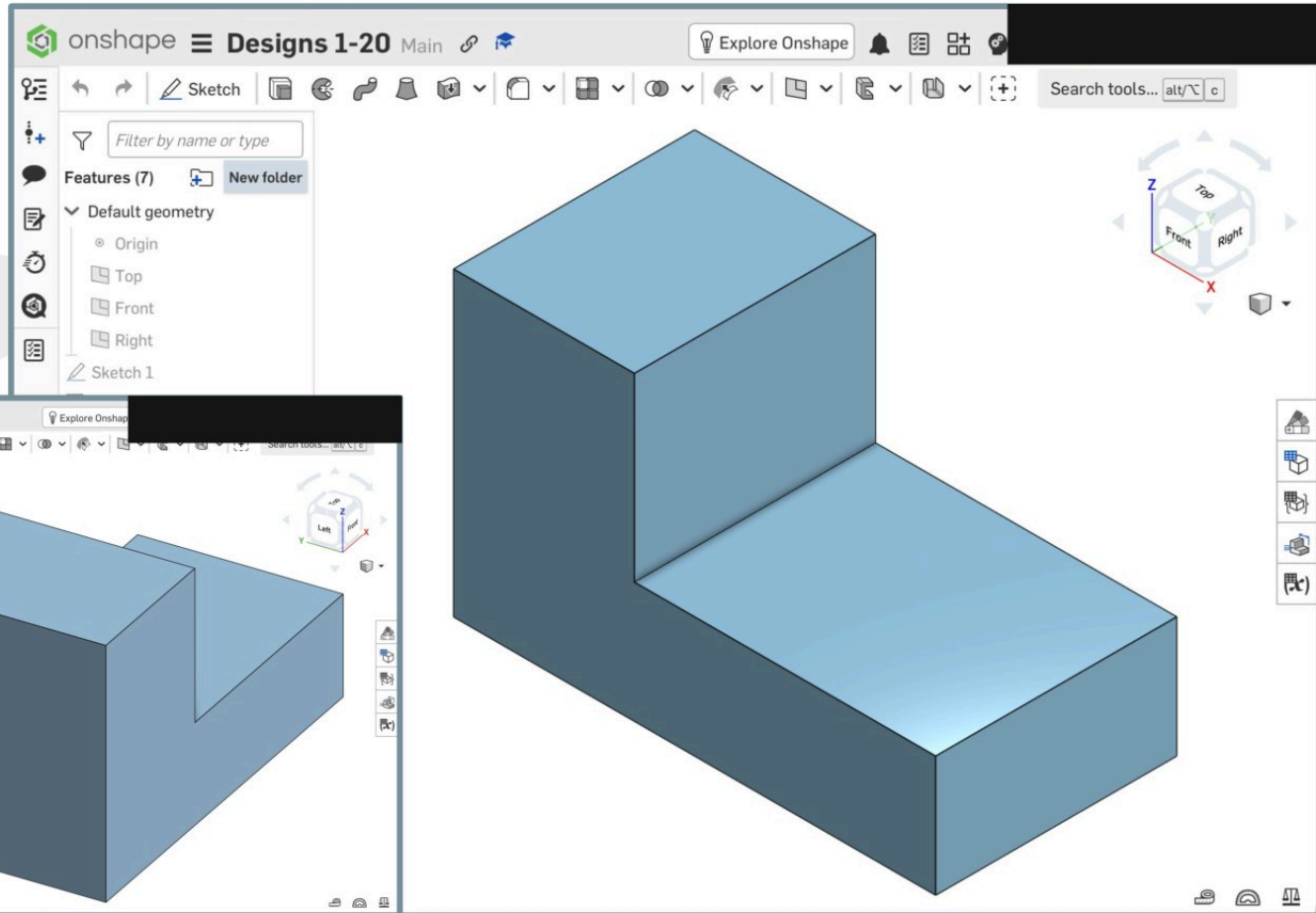
onshape
Designs 1-20
Main
Explore Onshape
Sketch
Search tools...
Filter by name or type
Features (7)
New folder
Default geometry
Origin
Top
Front
Right
Sketch 1

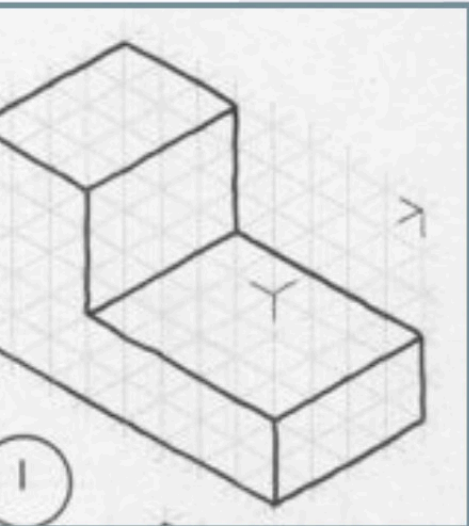

Design 02

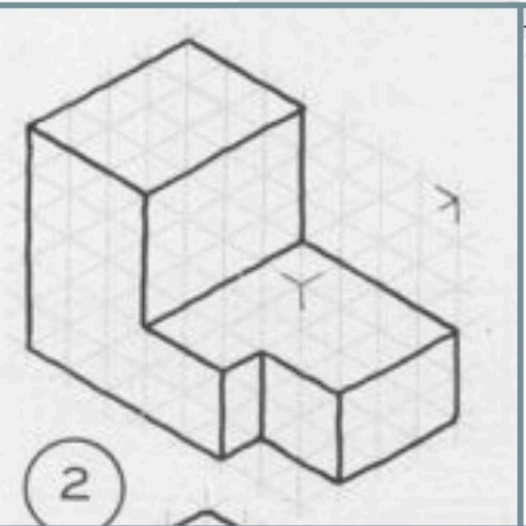
2

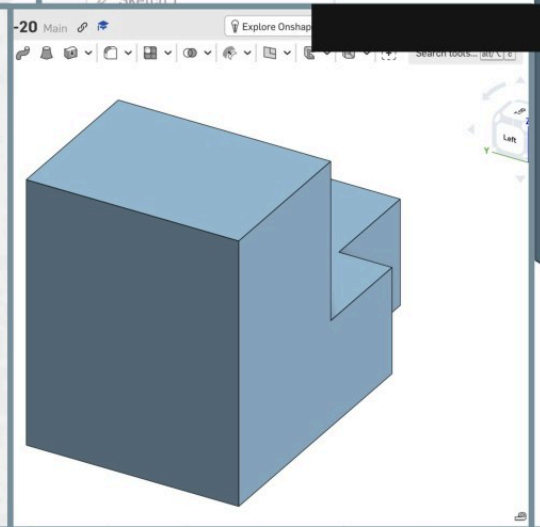

onshape
Designs 1-20
Main
Explore Onshape
Sketch
Search tools...
Filter by name or type
Features (7)
Default geometry
Origin
Top
Front
Right
Sketch 1

Design 03

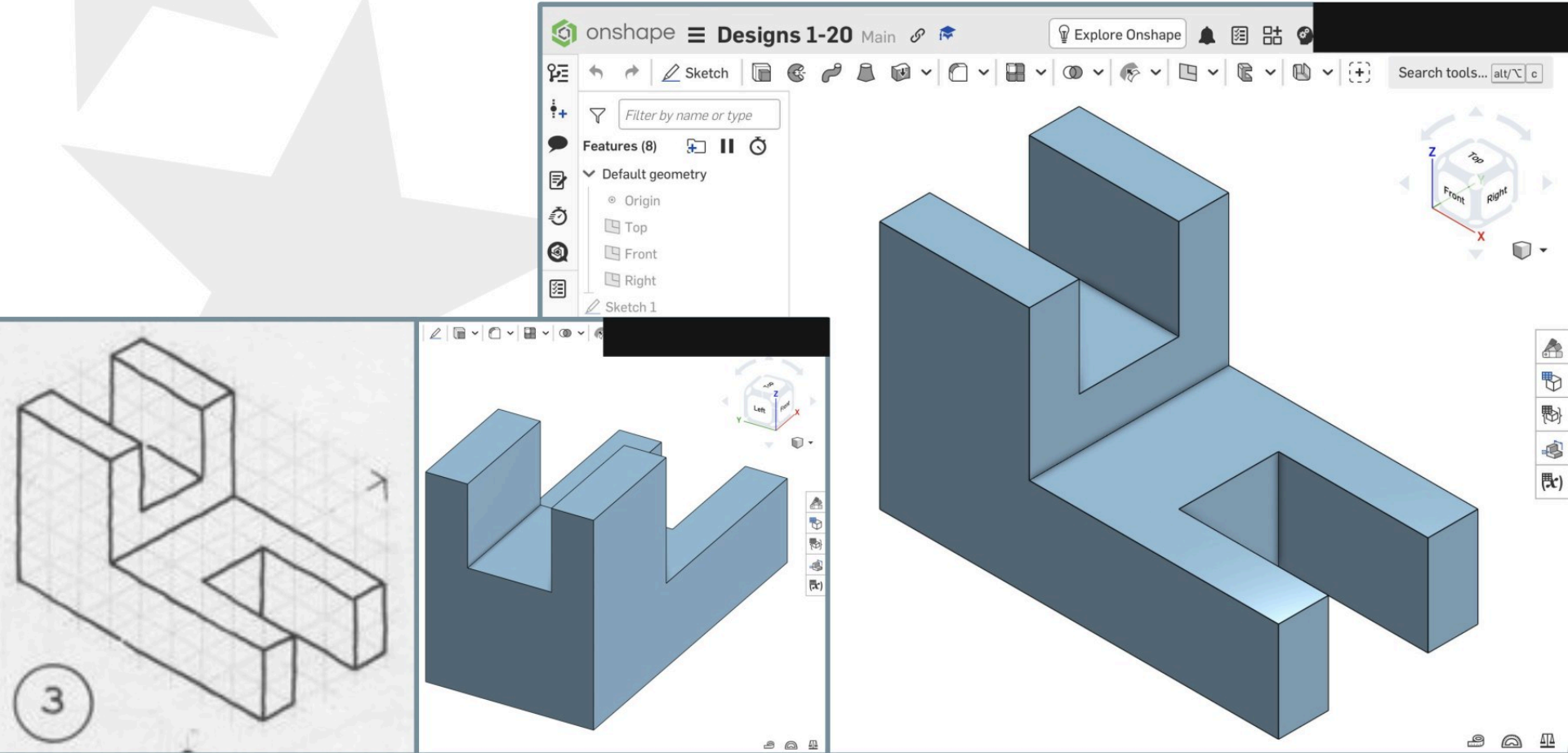
onshape
Designs 1-20
Main
Explore Onshape
Sketch
Search tools...
Filter by name or type
Features (8)
Default geometry
Origin
Top
Front
Right
Sketch 1
3

Design 04

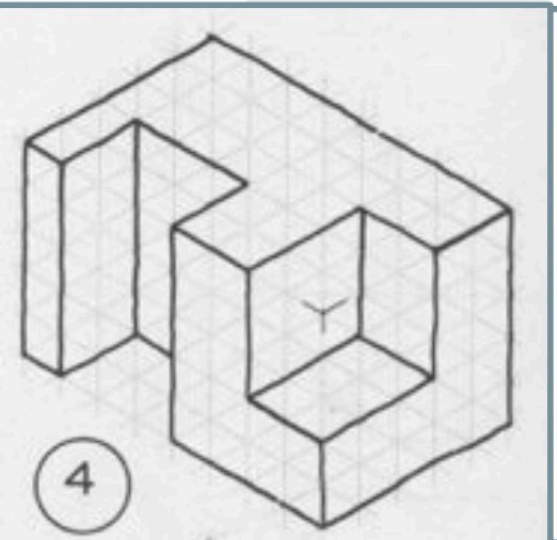
4

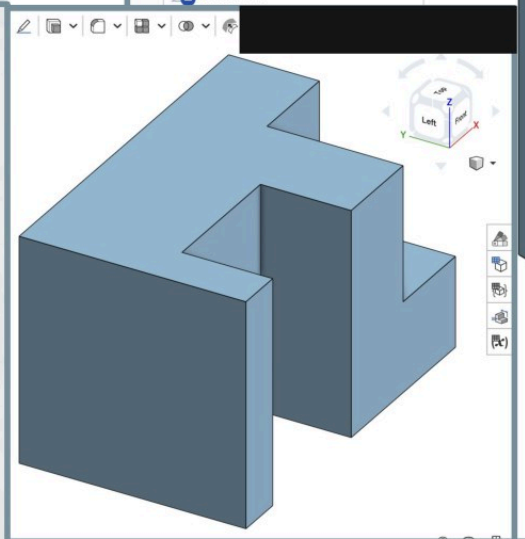

onshape
Designs 1-20
Main
Explore Onshape
Sketch
Search tools...
Filter by name or type
Features (7)
Default geometry
Origin
Top
Front
Right
Sketch 1

Design 05

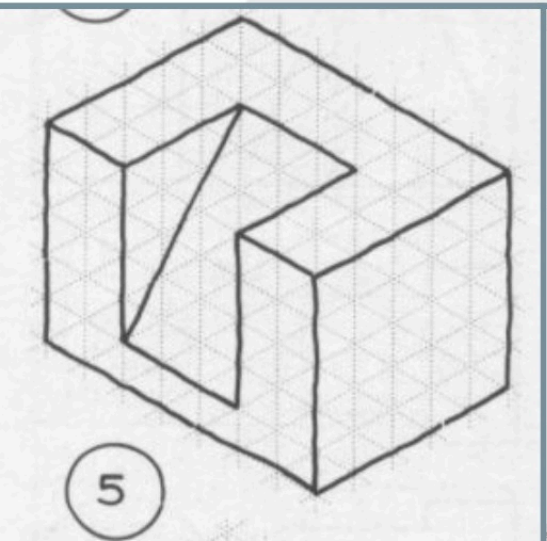
5

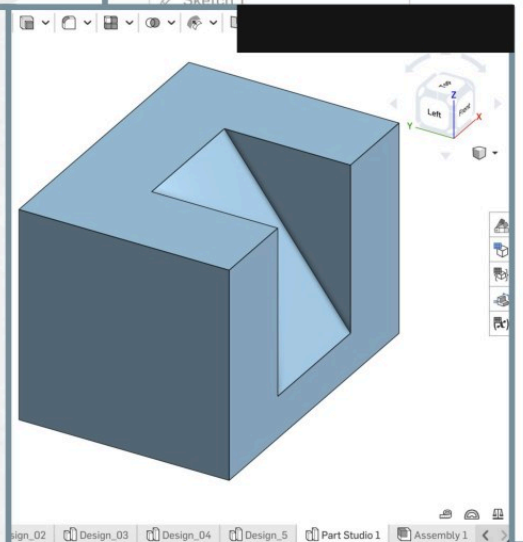
Left
Front
Part Studio 1
Assembly 1

onshape
Designs 1-20
Main
Explore Onshape
Sketch
Search tools...
Filter by name or type
Features (8)
Default geometry
Origin
Top
Front
Right
Sketch 1
Z
Top
Front
Right
X

Checkpoint #1

1. Turning an isometric drawing into a 3D model is becoming ‘easier’ with every design, more specifically, as I’ve come to compare it to a mix of art and math. Art, because you’re quite literally sculpting something just through math and visuals, and frankly, guessing. The videos were very helpful in the beginning, and allowed me to experiment without them for future designs which were successful.

2. A problem I encountered was figuring out which plane I should sketch based on what the design was asking of. For example, I tried design 05 without the video but since the triangular cutout was something I hadn’t learned yet, I ended up messing around with the planes until I eventually just watched the video.

Design 06

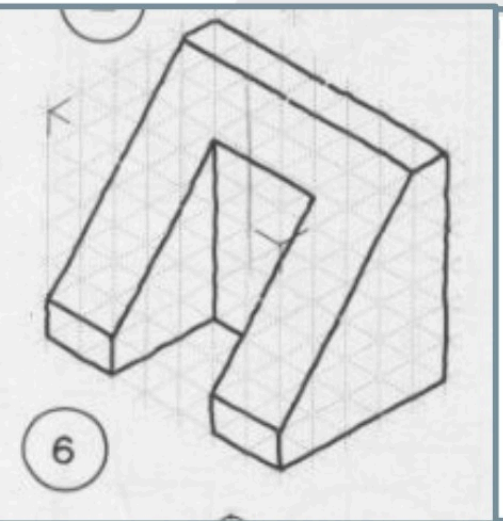
6

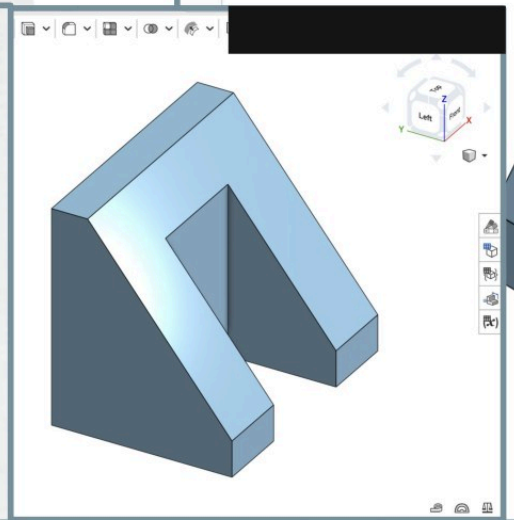

onshape
Designs 1-20
Main
Explore Onshape
Sketch
Search tools...
Top
Front
Right

Design 07

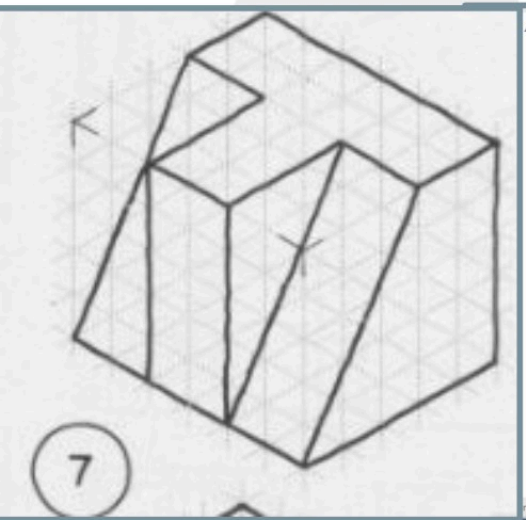
7

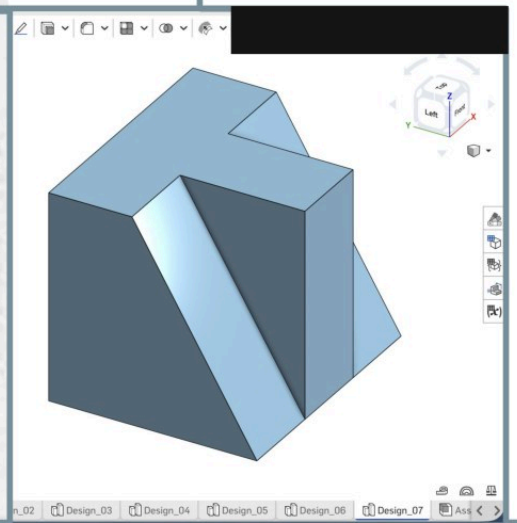
Design_03
Design_04
Design_05
Design_06
Design_07

onshape
Designs 1-20
Main
Explore Onshape
Sketch
Search tools...
alt/⌥ c
Top
Front
Right
Z
X

Design 08

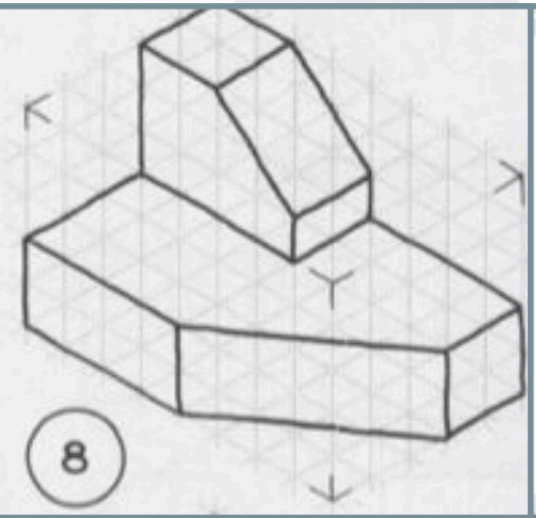
8

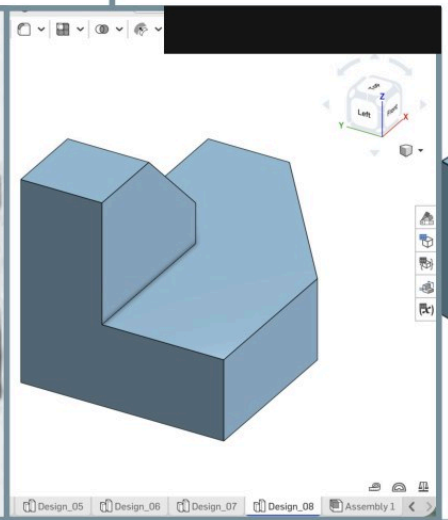
Design_05
Design_06
Design_07
Design_08
Assembly 1

onshape
Designs 1-20
Main
Explore Onshape
Sketch
Search tools...
Top
Front
Right

Design 09

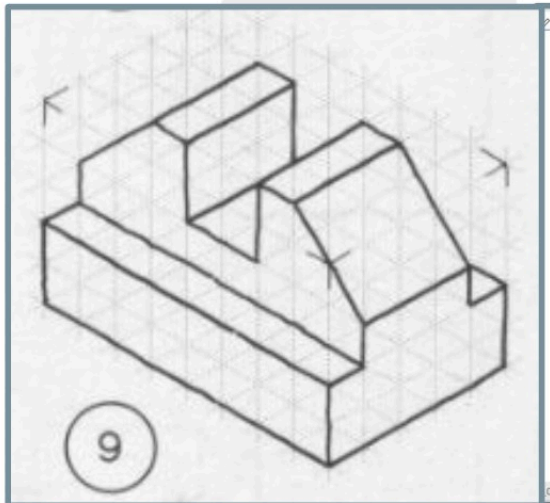
9

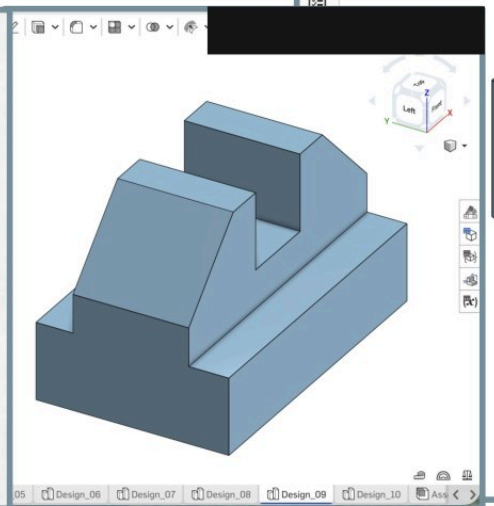
Design_06
Design_07
Design_08
Design_09
Design_10

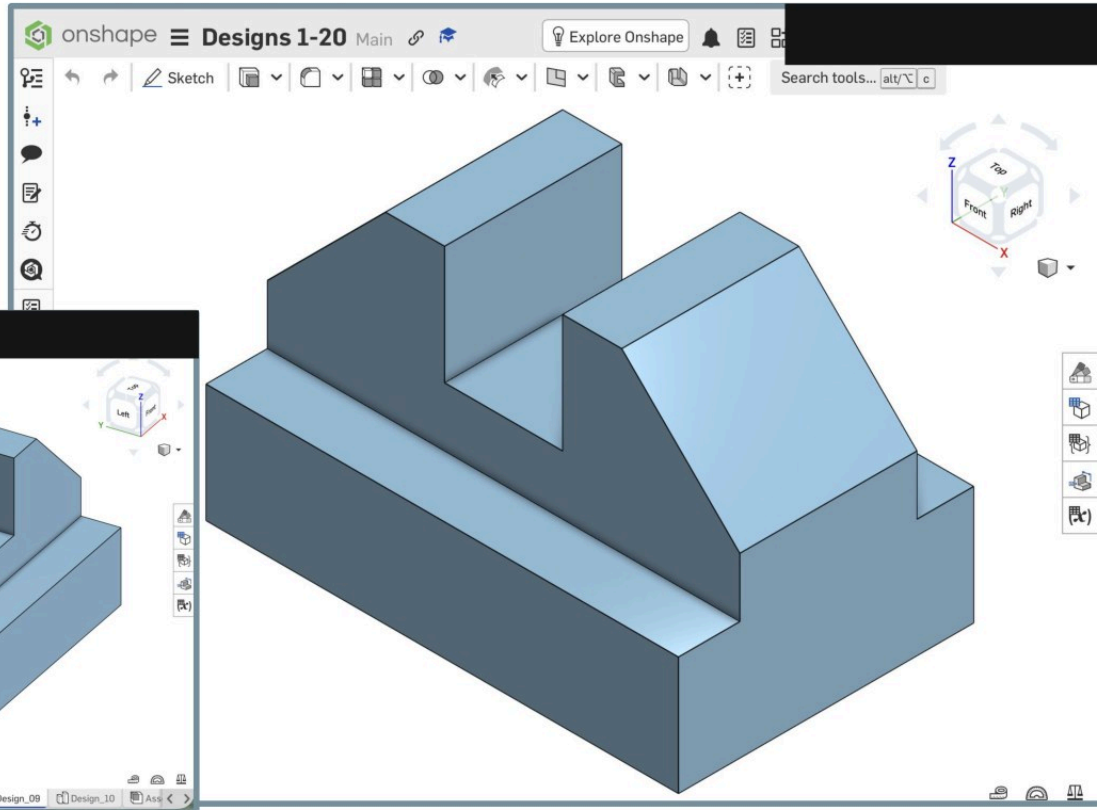
onshape
Designs 1-20
Main
Explore Onshape
Sketch
Search tools...
Top
Front
Right

Design 10

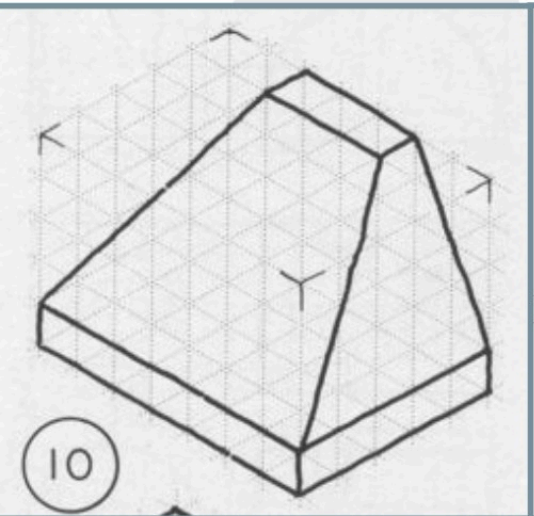
10

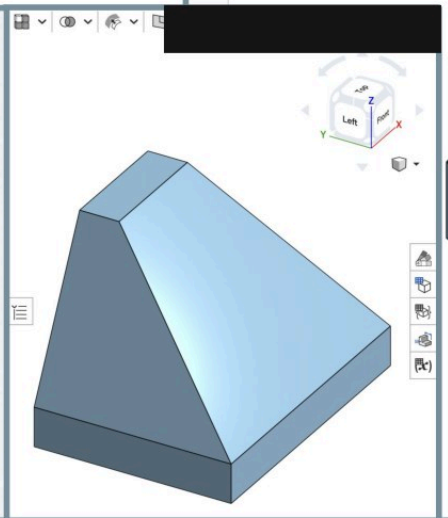

onshape
Designs 1-20
Main
Explore Onshape
Sketch
Search tools...
Top
Front
Right

Checkpoint #2

1. An Onshape tool that's becoming reliable for me has definitely been the dimensions feature, since I tried extruding a design but it wasn't until I was almost finished that I noticed the numbers weren't even, therefore causing me to re-do the entire model. With the dimensions tool I'm able to center sketches and properly space lines, allowing for the final product to actually be identical to the isometric.

2. A mistake that taught me something useful about CAD was when I tried making the diagonal cuts for design 10, since I made an attempt before watching the video but I overcomplicated the sketch, which made extruding sections quite confusing and caused multiple errors. I realized after following the tutorial, that the sketch really doesn't need to outline every edge of the isometric, but rather the major points needed to perform the desired removal of a section.

Design 11

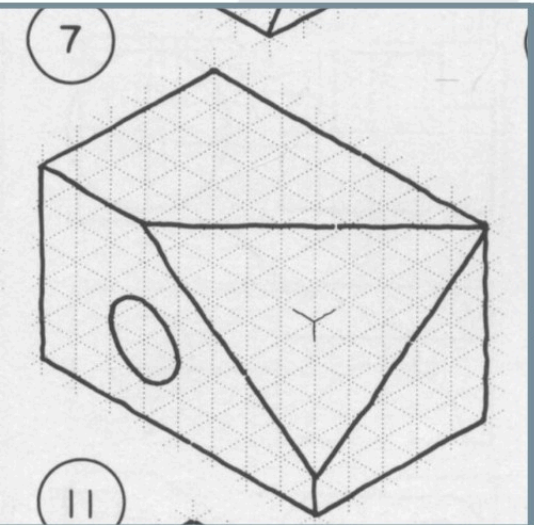
7
11

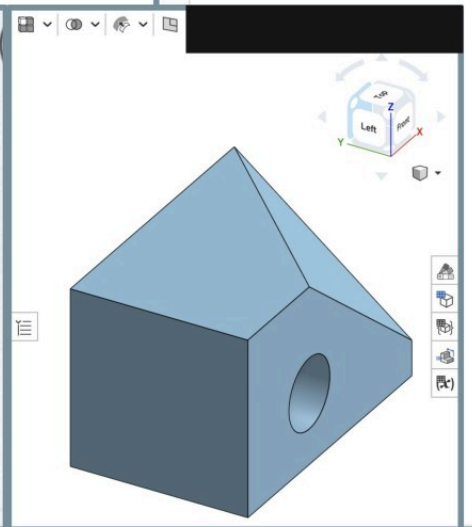
Left
Front

onshape
Designs 1-20
Main
Explore Onshape
Sketch
Search tools...
alt/⌥ c
Top
Front
Right

Design 12

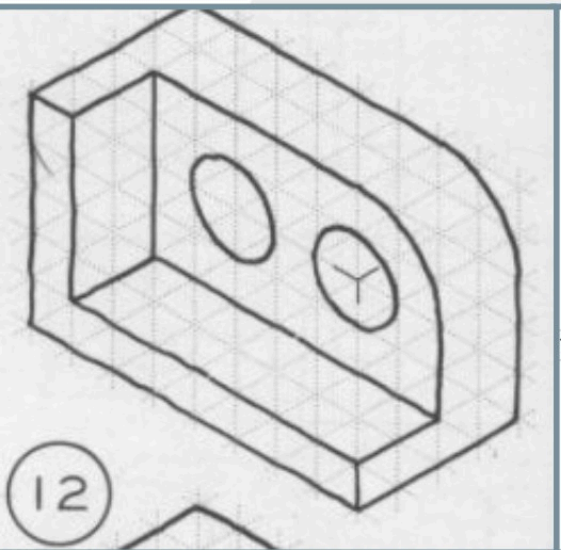
12

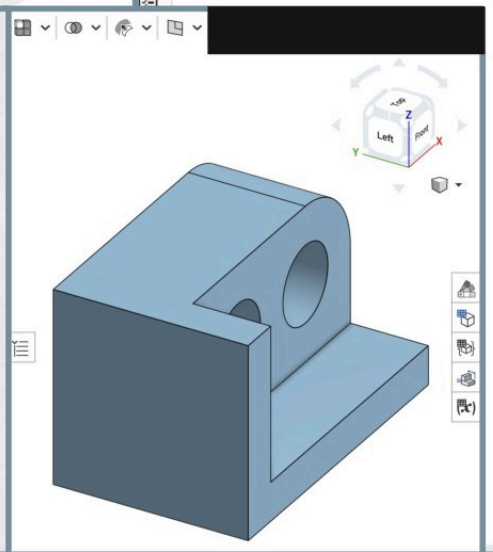
Left

onshape
Designs 1-20
Main
Explore Onshape
Sketch
Search tools...
Top
Front
Right

Design 13

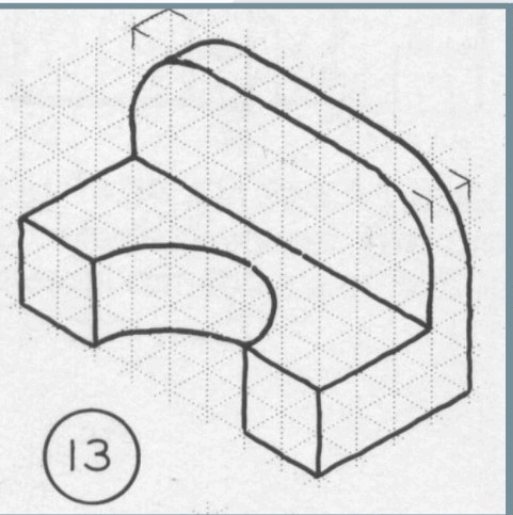
13

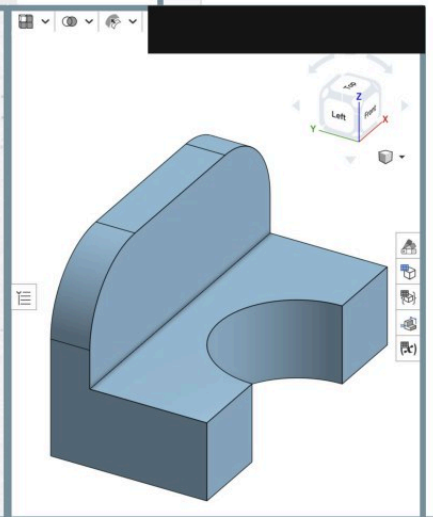

onshape
Designs 1-20
Main
Explore Onshape
Sketch
Search tools...
Top
Front
Right

Design 14

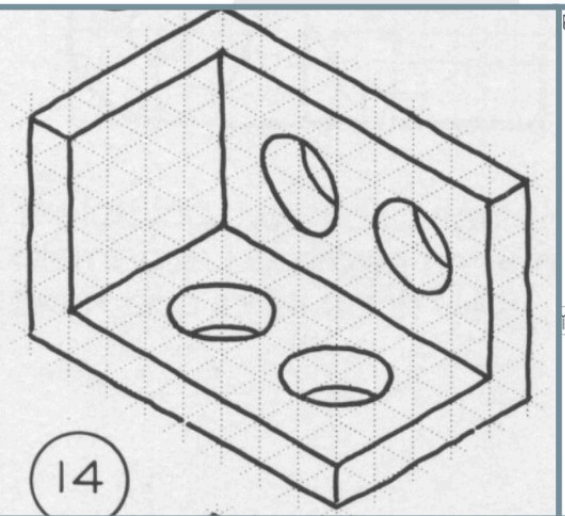
14

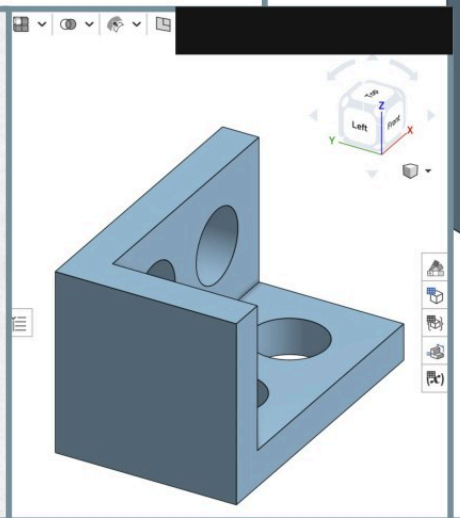

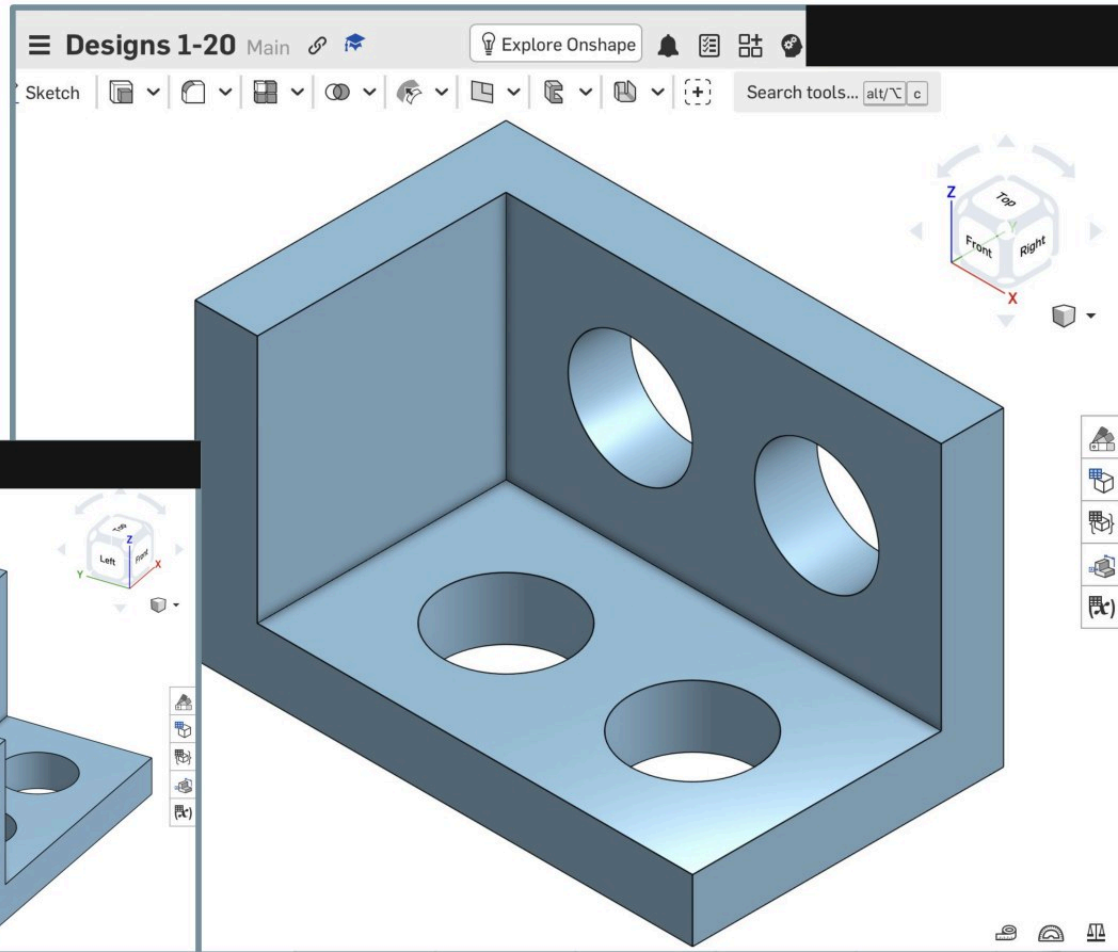
Designs 1-20
Main
Explore Onshape
Sketch
Search tools...
Top
Front
Right

Design 15

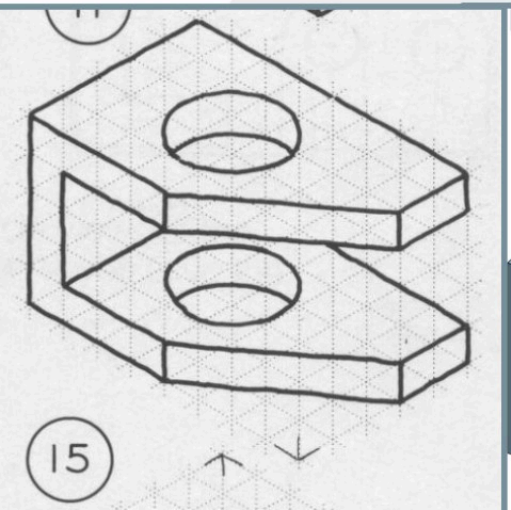
15

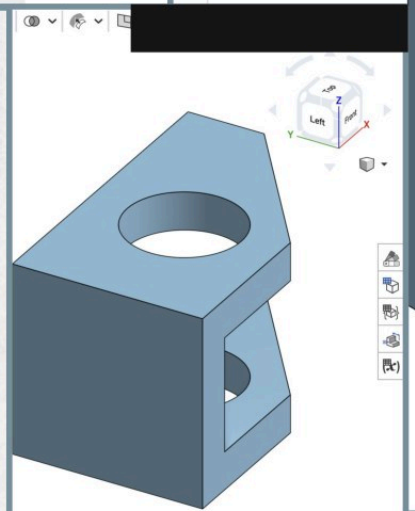

onshape
Designs 1-20
Main
Explore Onshape
Go to documents
Sketch
Search tools...
alt/⌥ c
Top
Front
Right
Z
X

Checkpoint #3

1. Surprisingly, designs 12-15 made perfect sense to me without the videos, so I was able to quickly move through those, yet 11 was the one I got stuck on. I hadn't used the 'sweep' tool before, but after figuring out how to go about removing parts with it, I found it to be quite useful, just mildly confusing at first. Back to 12-15, I really did have to experiment with what I thought the isometric was asking for, and successfully executed the sketch. Design 15 was the only non-video design that took a minute longer to interpret, but was exactly pretty simple once I got into the hang of where I should mark the model and what planes to pick.

2. As stated above, the main thing I needed help with was the 'sweep' feature, but the video tutorial was very insightful, allowing me to successfully remove parts where needed. To be honest, I definitely still need practice with it, but I'm glad to be familiar with it, nonetheless.

Design 16

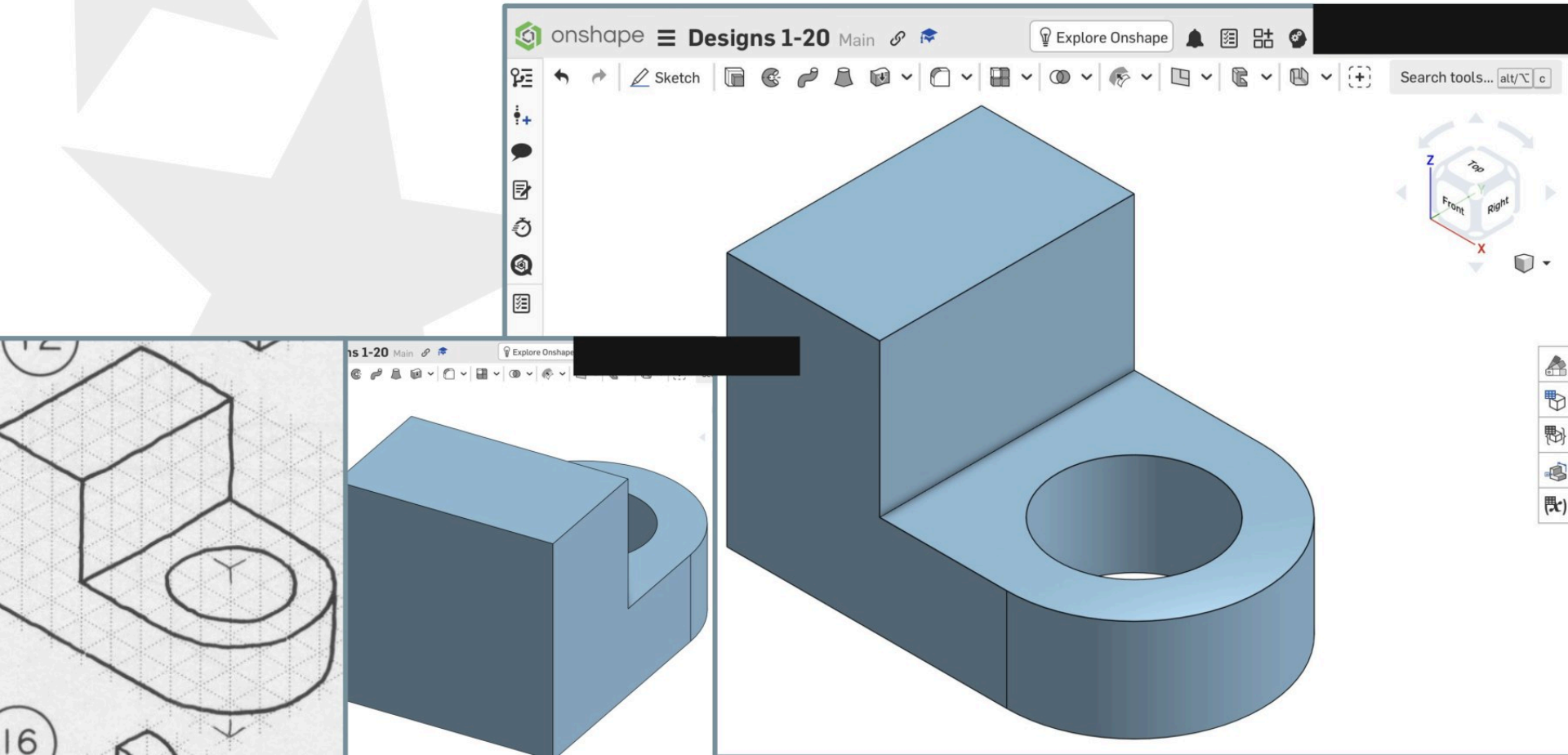
onshape
Designs 1-20
Main
Explore Onshape
Sketch
Search tools...
alt/⌥ c
Top
Front
Right
Z
Y
X

Design 17

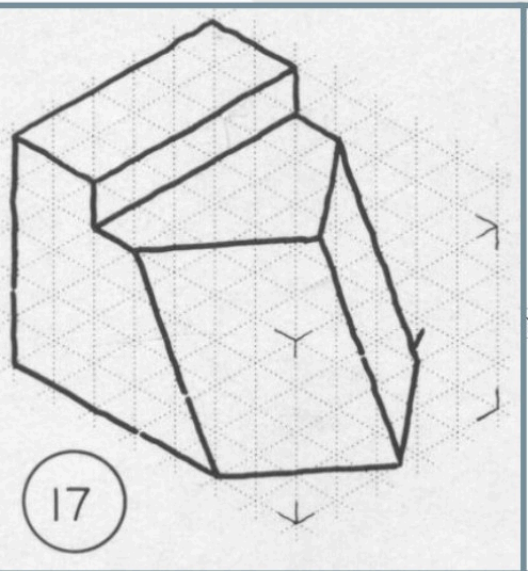
17

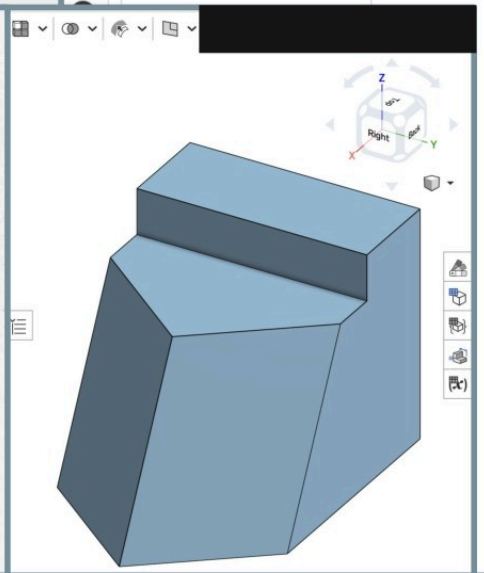

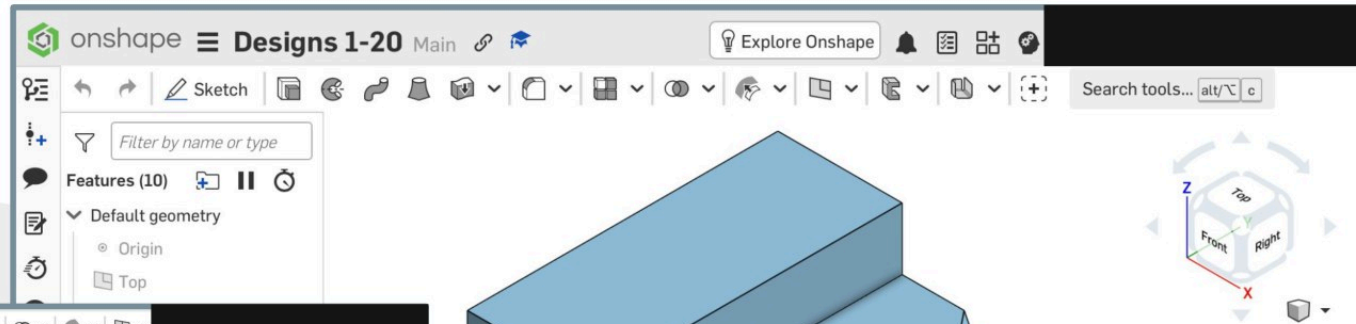
onshape
Designs 1-20
Main
Explore Onshape
Sketch
Search tools...
Filter by name or type
Features (10)
Default geometry
Origin
Top
Front
Right

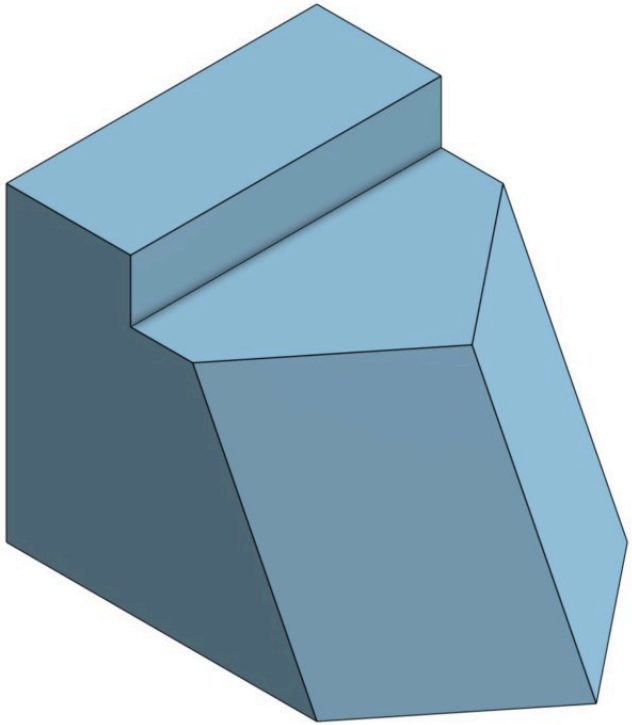

Design 18

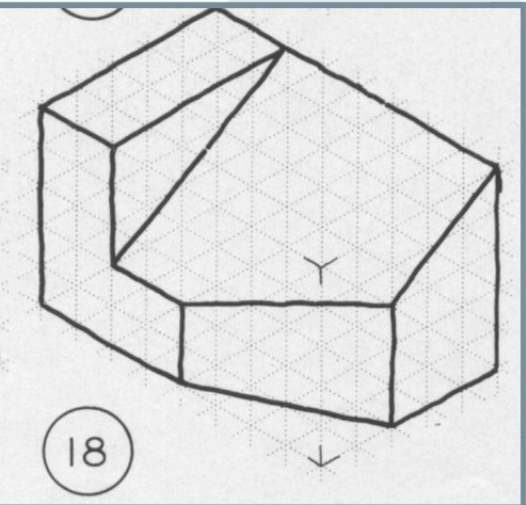
18

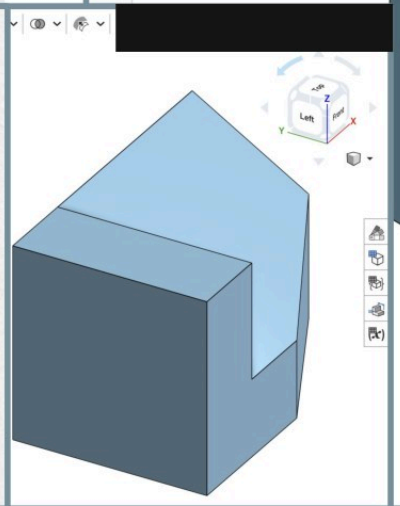

onshape
Designs 1-20
Main
Explore Onshape
Sketch
Search tools...
Top
Front
Right

Design 19

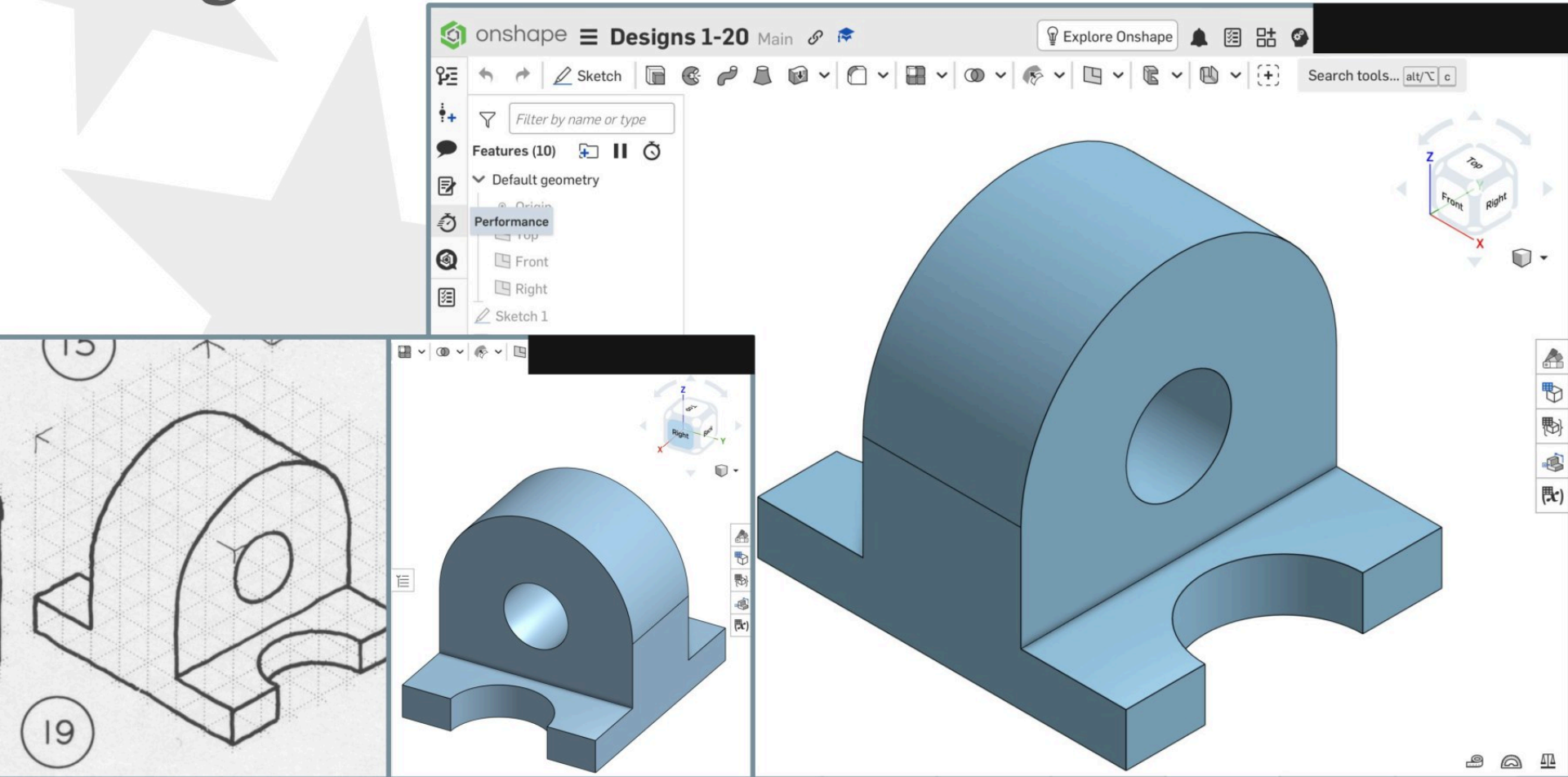
onshape
Designs 1-20
Main
Explore Onshape
Sketch
Search tools...
Filter by name or type
Features (10)
Default geometry
Performance
Front
Right
Sketch 1
Top
Front
Right
19

Design 20

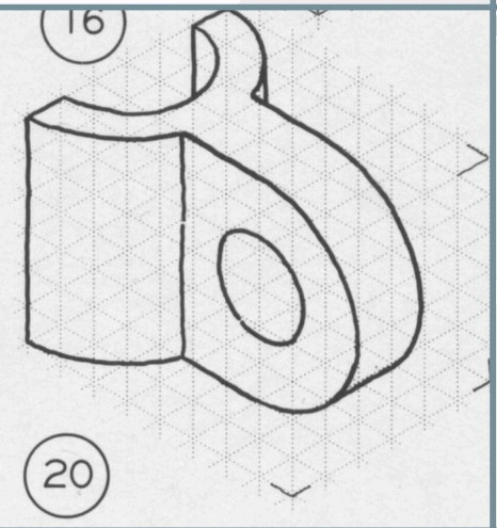
16
20

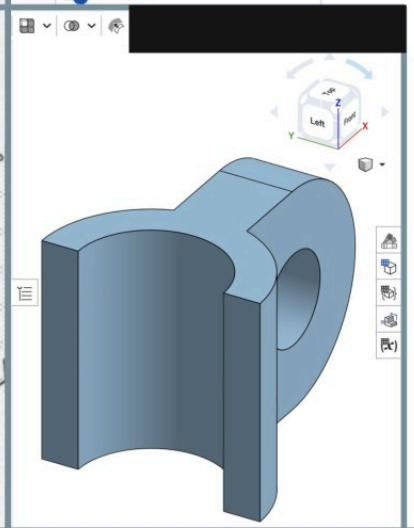
Left
Front

onshape
Designs 1-20
Main
Explore Onshape
Versions and history
Search tools...
Filter by name or type
Features (9)
Default geometry
Origin
Top
Front
Right
Sketch 1
Top
Front
Right

Checkpoint #4

1. When approaching an unfamiliar design, in comparison to design 01, I first determine the basics of it, such as the overall shape/size of it (dimensions). After getting the base "block" structure down, I can then look for what needs to be taken off or added, then do as so. I know for design 20, my final product looked almost identical to the isometric, but something seemed off. I realized that the dimensions of the end with a circular cutout were slightly wrong, so I did have to go back to the original sketch and correct the measurements (which wasn't ideal but necessary) and now it looks correct.

2. I'd say that design 20, despite initial errors, does show my growth the best out of 16-20. Partly because the isometric itself had me hesitate beforehand, but I feel accomplished having recognized what I did wrong and being able to tackle it even if the design seemed intimidating.

From CAD to print - Design 14

CALIPER READINGS

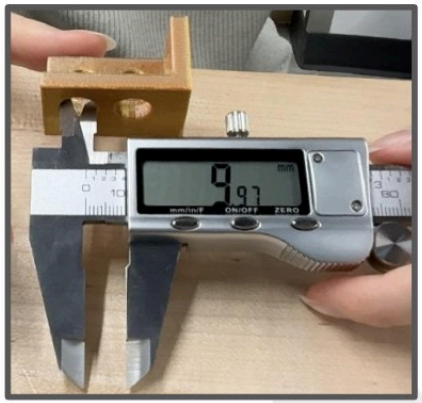





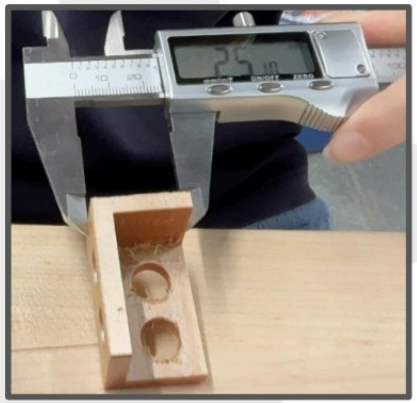

From CAD to print - Design 14

DIMENSION COMPARISONS

Dimension	Measurement (mm)	
	Onshape	Physical
1	20 (10)	9.97
2	80 (40)	39.98
3	50 (25)	25
4	50 (25)	25.10

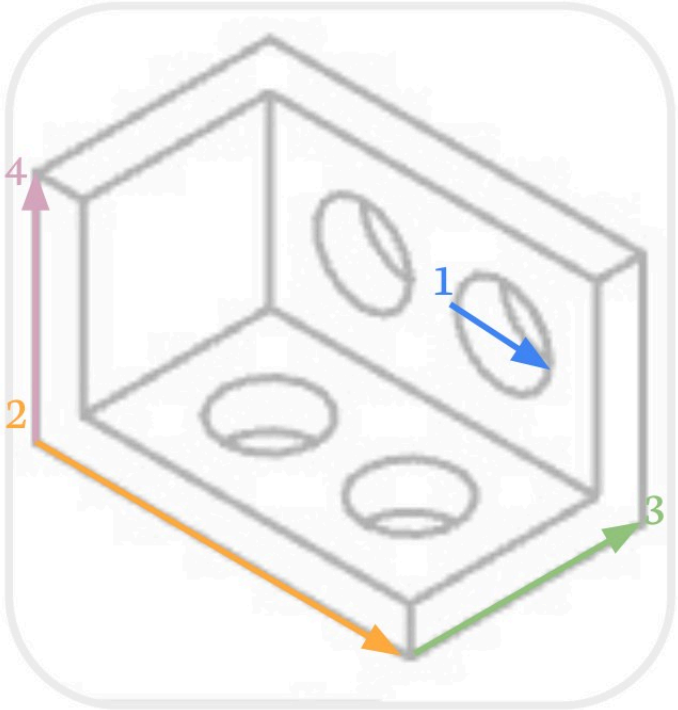

*ALL PHYSICAL PRINTS ARE AT 50% SCALE COMPARED TO ONSHAPE MEASUREMENTS

Design 14 Analysis

The manufactured object matched the digital design surprisingly well, with some sides only being 0.02-0.03 mm off. For example, the diameter of the circular cutout (dimension 1) having a digital measurement of 10 mm (scaled to print) and the physical print being 9.97 mm. Though dimension 3 was spot on, I wasn't expecting the 3D printer to have every side on the dot. Considering the way the model had been positioned when printing, the top of the circle likely didn't have anything beneath it to fully support its structure, leading minor dips in the final circumference. Dimension 4 was 0.10 mm off and it looks to me that the filament pooled/warped a bit on the edge when it wasn't set yet, causing the extra bit of plastic.

From CAD to print - Design 15

CALIPER READINGS









From CAD to print - Design 15

DIMENSION COMPARISONS

Dimension	Measurement (mm)	
	Onshape	Physical
1	80 (40)	40.12
2	50 (25)	25.04
3	30 (15)	15.07
4	30 (15)	14.96

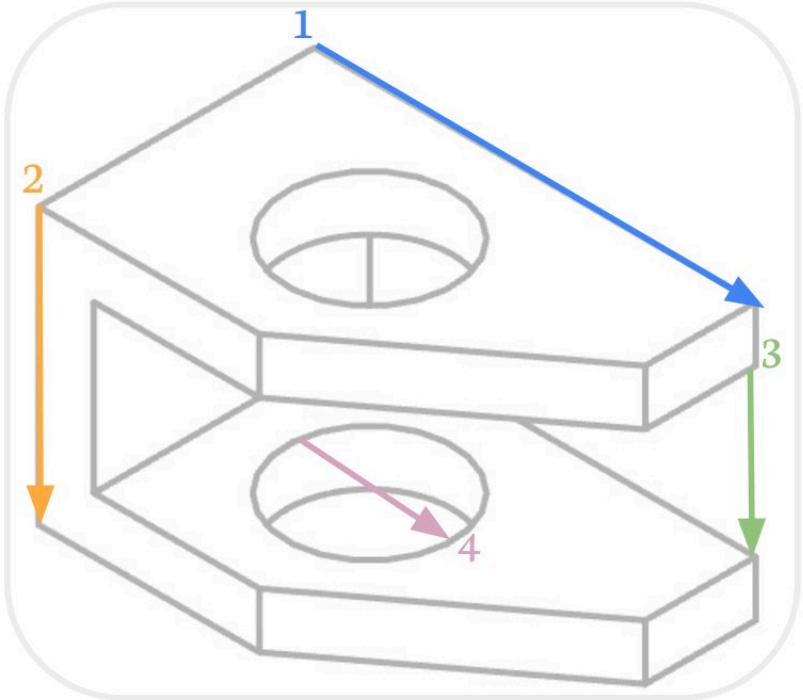

*ALL PHYSICAL PRINTS ARE AT 50% SCALE COMPARED TO ONSHAPE MEASUREMENTS

Design 15 Analysis

After comparing Design 14's dimensions, seeing 15's also had me a bit surprised, but more so confused. Dimension 1 in particular, with the digital being 40 mm (scaled to print) and the physical as 40.12 mm. The 0.12 mm difference could be a user error when handling the calipers, though the other measurements and their differences seemed more reasonable. My other assumption is that the printer ran an extra line of filament on the tapered end, yet the design was printed from the closed/flat end on the mat and up.

Final Reflection 1/2

1. Out of the 20, design 10 actually challenged me the most. As I mentioned in checkpoint #2, I made an attempt to model it without watching the tutorial beforehand, but was quickly humbled by the errors when I'd try to cut off the slanted sides. I eventually watched the video and found that I had overcomplicated the sketch when I only needed half of the lines I'd drawn.
2. I began relying less on the videos about halfway through after becoming familiar with the general tools and techniques to execute the designs. Of course, I did refer to them from time to time to make sure I was doing the steps properly and to not fall into the habit of doing something one way, when the product would've been the exact same just done in a much simpler manner.

Final Reflection 2/2

3. Besides the given tutorials, a quick Google search about 'why the extrusion keeps turning red' or 'how to change the size of text' and more were helpful for learning how to adjust little details in a timely manner. But for design-specific issues, the videos worked best in walking through the steps of how to build up the model. Other than those, and as repetitive as it sounds by this point, I really did experiment with everything until the dimensions lined up with the original drawing.
4. By now, Onshape is far more familiar to me and easier to work with (though I've yet to try out the other actions). I'm now able to make larger cutouts, slightly more detailed models, and pretty interesting compositions such as designs 18 and 20. I walked into it with a mild reminiscence of Tinkercad from elementary to early middle school, yet was able to walk out with some cooler techniques in mind.

The End

Onshape CAD Portfolio