First Circuit Foundations

A first LED circuit in Tinkercad and on a breadboard.

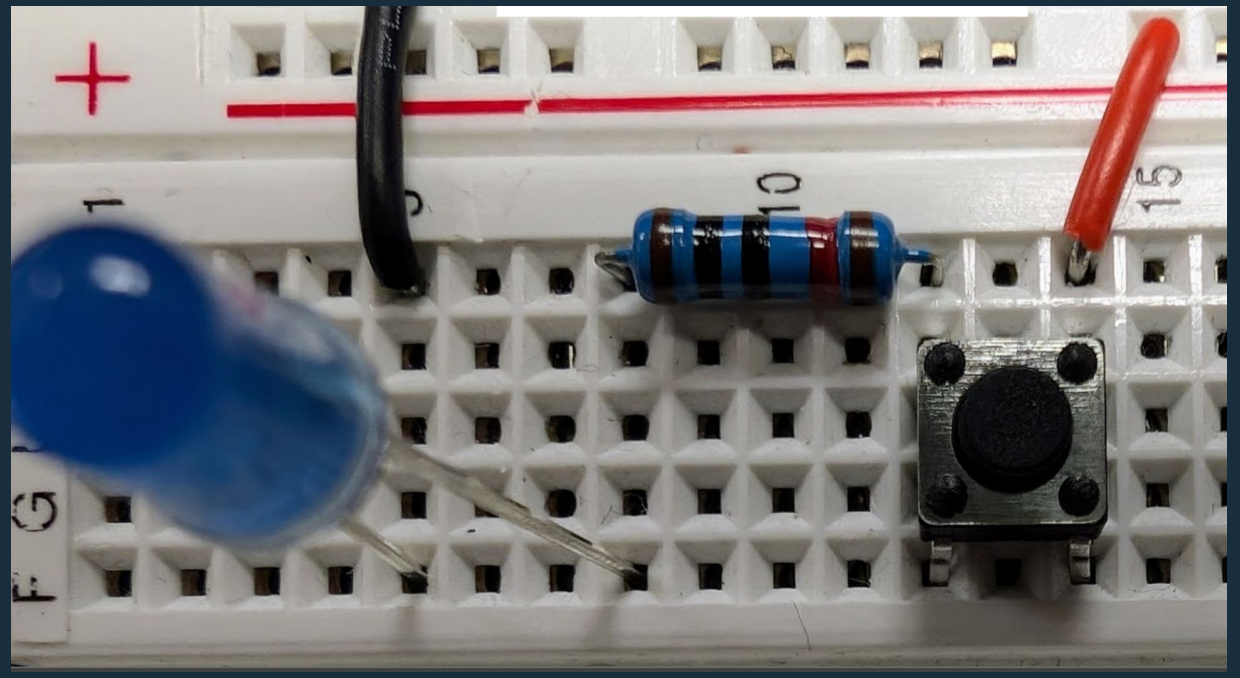

Classroom presentation

What Is an Electrical Circuit?

A circuit is a complete, closed path that lets electric charge move and transfer electrical energy.

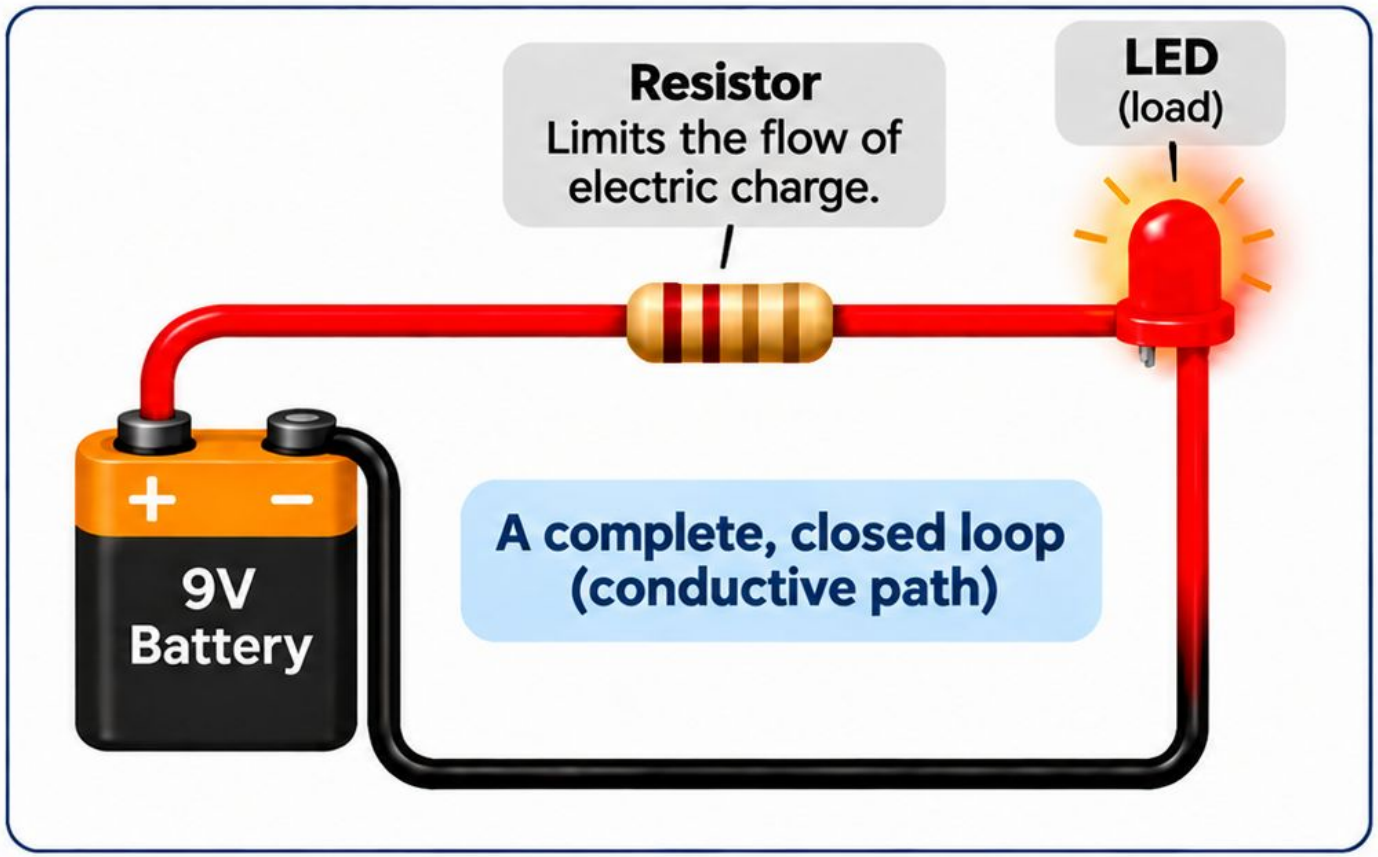

Key Takeaway: All three must work together. If any one is missing, the circuit will not work.

A Working Circuit Needs Three Things



1. A Source

Provides electrical energy (for example, a battery or power supply).



2. A Load

Uses electrical energy and changes it into another form (for example, light, heat, or motion).



3. A Complete Conductive Path

A closed loop that connects everything and lets charge move.

A flashlight is a circuit

What changes in the electrical path when you open the switch?

Anatomy of a Flashlight



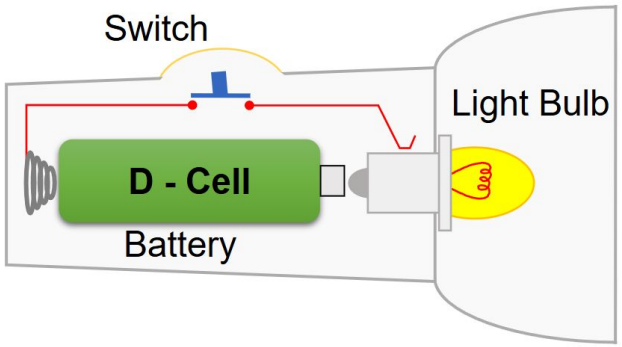

Flashlight Block Diagram

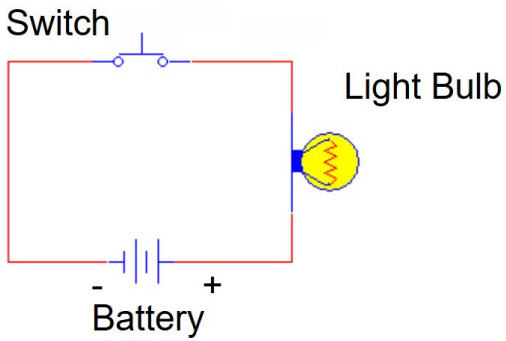

Flashlight Schematic Diagram

Voltage, current, resistance, and power

Voltage (V)

Voltage is the **push** that moves electric charge through a circuit.

More voltage means a stronger push.

Unit: volts (V)

Think of voltage like water pressure in a pipe. Higher pressure can push more water through.

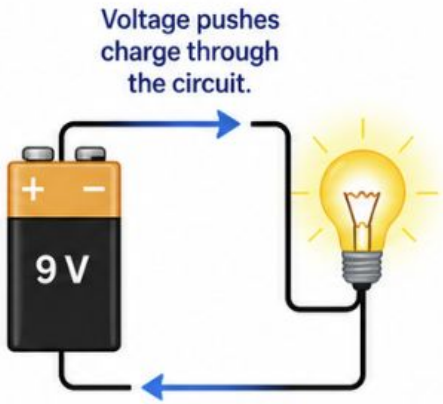

Current (I)

Current is **how much electric charge passes a point each second.**

It describes the rate at which charge moves through a circuit.

Unit: amperes, or amps (A)

Think of current like the flow of water in a pipe. It's how much water moves past a point each second.

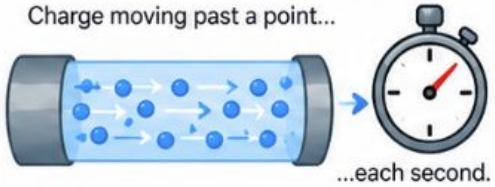

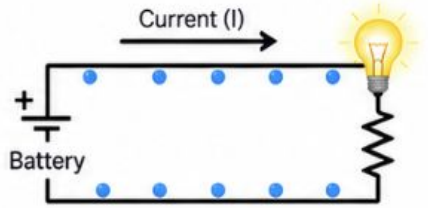

Resistance (R)

Resistance describes how strongly something **opposes the movement of current.**

Unit: ohms (Ω)

Think of resistance like a narrow pipe or a rough pipe. It makes it harder for water to flow.



A resistor

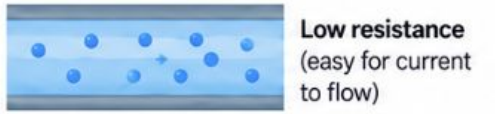

Low resistance (easy for current to flow)

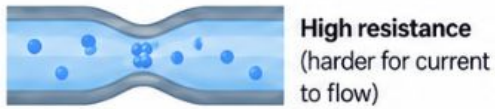

High resistance (harder for current to flow)

Power (P)

Power describes **how quickly electrical energy is being transferred or converted.** It tells us how much work a circuit is doing each second.

Unit: watts (W)

Think of power like how bright a light bulb is. A higher power means more energy is being used (brighter light).

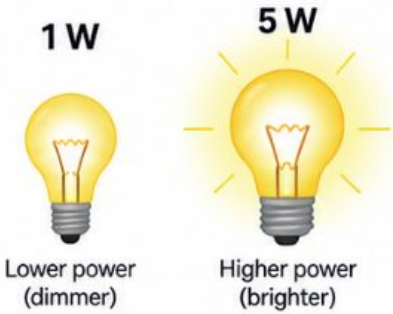

$$P = V \times I$$

Power is the product of voltage and current.

Resistors among other components

Which parts might be resistors? What clues are you using?

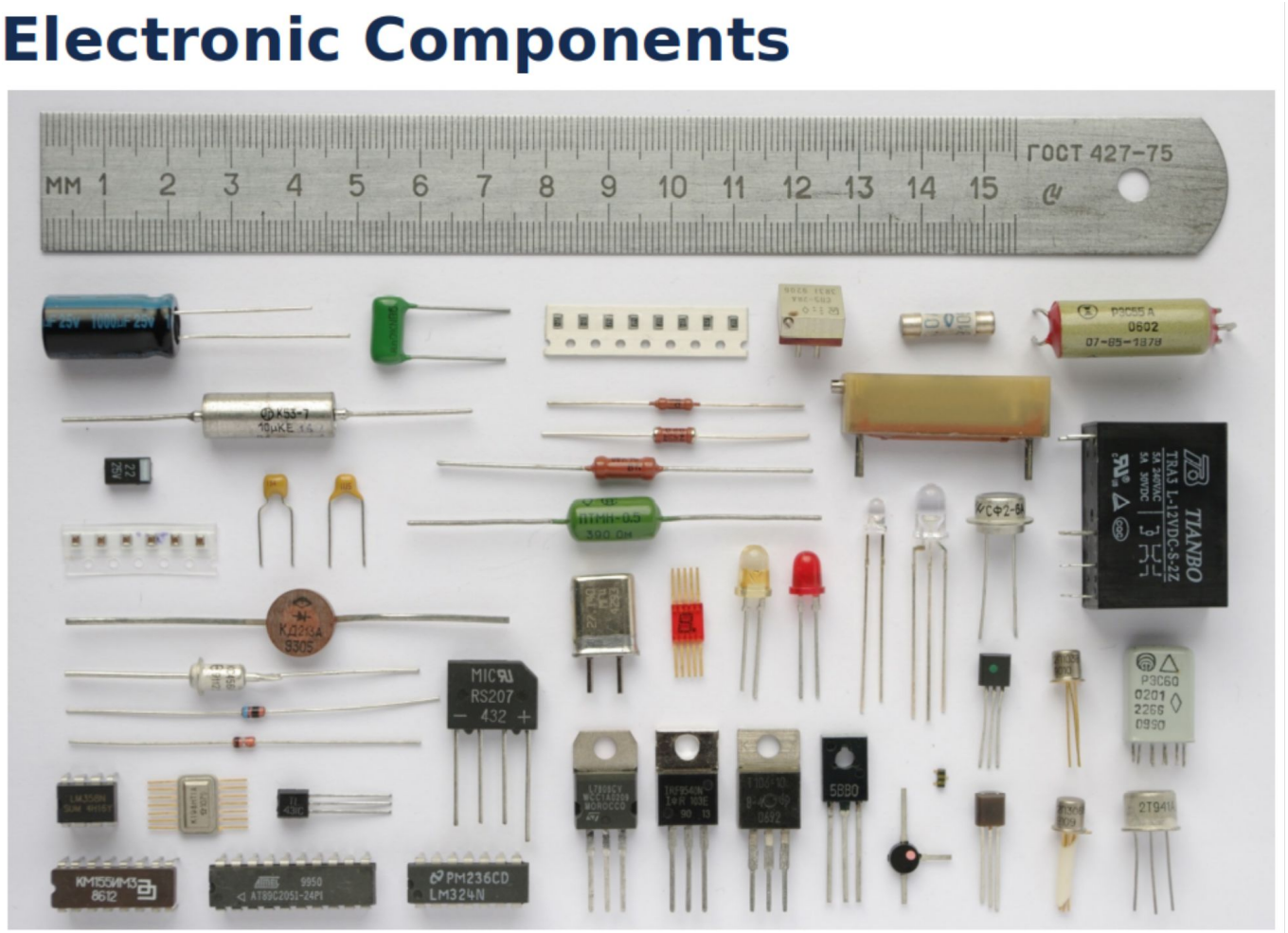

Resistor



What does a resistor do?

A resistor is an electronic component that makes it harder for **electric charge** to flow through a circuit.

Its resistance helps determine how much current flows through a circuit.

Measured in: Ohms (Ω)

A resistor is **non-polarized**, meaning it can be connected in either direction.



Schematic Symbol



Physical Component



Internal Construction

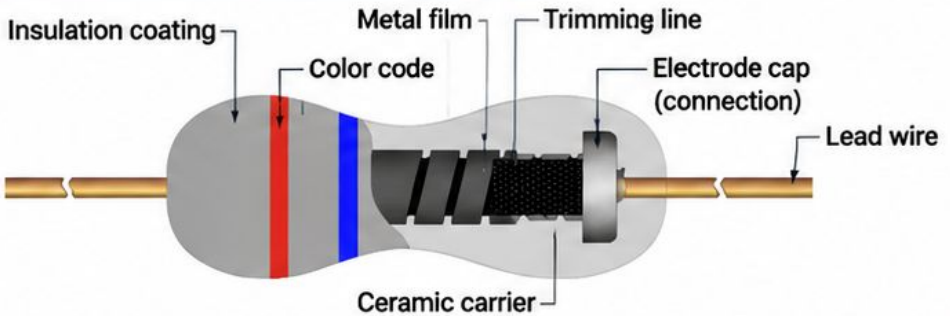

Resistor Analogy: A Rock in a Pipe

A resistor is like a rock in a pipe — it makes it harder for things to flow through.

Smaller Rock
(Lower Resistance)



- Less blockage
- More flow (higher current)

Larger Rock
(Higher Resistance)



- More blockage
- Less flow (lower current)

Why Resistance Matters

It keeps the right amount of electrical flow so components work safely and reliably.





The Voltage Picture

A 9 V battery is used, but the LED only needs about 3 V. The resistor "uses up" the extra 6 V and limits the current.

9 V = 6 V (resistor) **+ 3 V (LED)**

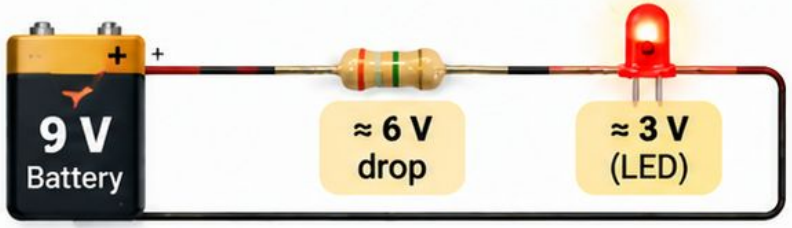

Why Not Just Use 3 V?

Real circuits often include multiple components that need different voltages.

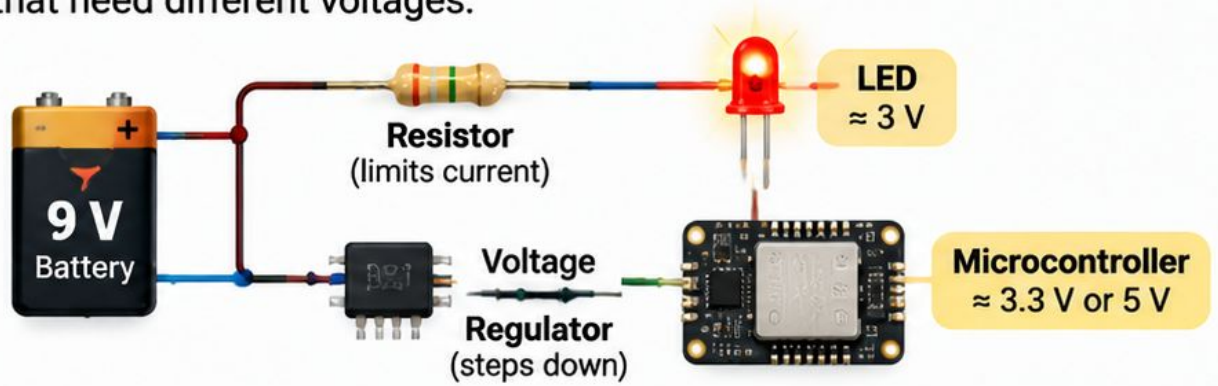

Resistors at a Glance

They control electric charge.
Resistors limit current and help components work safely and reliably.

Key Takeaways

- Limits the flow of **electric charge** (resistance).
- Used to control current and protect components (e.g., LEDs).
- **Non-polarized** — can be connected in either direction.

Common Resistor Types

Carbon Film (4-band)
Most common; value read with 4 color bands.



Carbon Film (5-band)
Higher precision; value read with 5 color bands.



Potentiometer (Variable Resistor)
Adjustable resistance (e.g., volume, brightness).



Schematic Symbols



Fixed Resistor
(constant value)



Potentiometer
(variable resistor, 3-terminal)

Different Sizes, Same Purpose



Do not assume a resistor's value from its physical size.

Size often relates to how much power it can handle (not the resistance value).

A Real-World Example: The Xbox Controller

The thumbstick uses **two potentiometers** (variable resistors) to measure its position and give the controller precise user control.

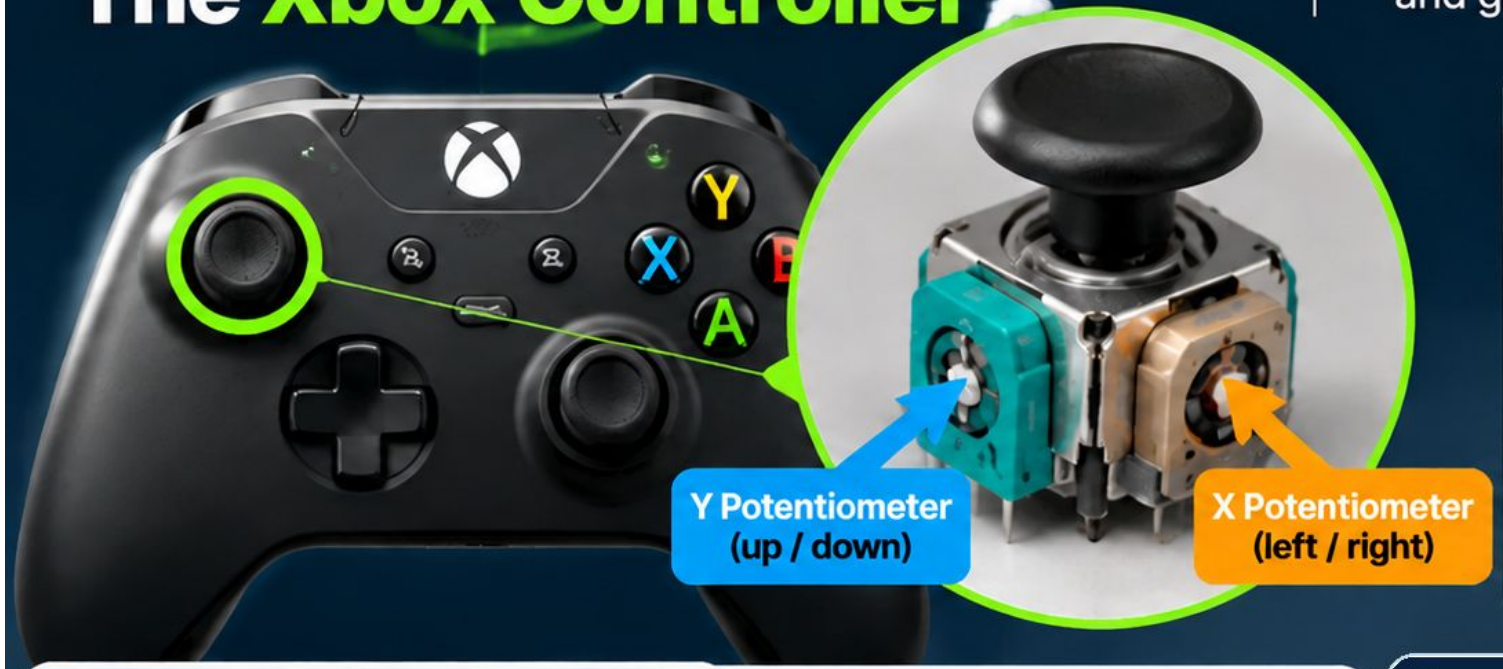

How It Works

1. Move the thumbstick.
2. Each **potentiometer changes** its **resistance**, which creates a different **voltage.**
3. The **controller reads both** voltages (X and Y) **at the same time.**
4. Those voltages are converted into a 2D position (an X, Y coordinate) to control movement.

From Resistance to Movement

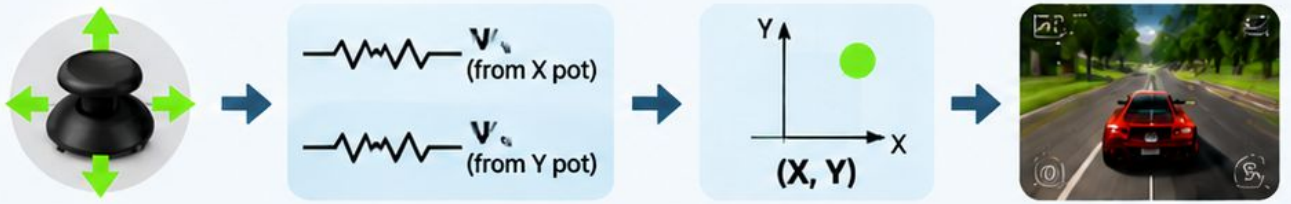

Thumbstick moves → **Two changing voltages** → **A 2D coordinate (e.g., +0.7, +0.6)** → **The game responds (e.g., move up-right)**

Thumbstick Positions & Example Readings

CENTER	RIGHT	UP	UP-RIGHT
X 0.00 Y 0.00	X +1.00 Y 0.00	X 0.00 Y +1.00	X +0.70 Y +0.70
Vx 1.65 V Vy 1.65 V	Vx 3.30 V Vy 1.65 V	Vx 1.65 V Vy 3.30 V	Vx 2.81 V Vy 2.81 V



Illustrative 3.3 V supply • normalized position range: −1.00 to +1.00

Reading Resistor Value and Tolerance

Use the color bands to find the nominal resistance and tolerance, and a DMM to verify the actual value.

1 Read the Color Bands

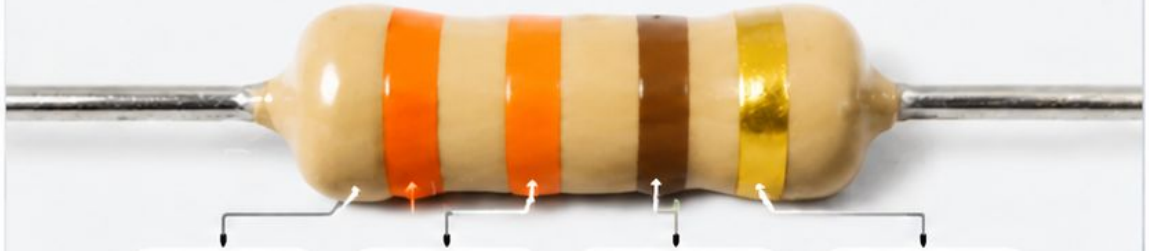

Value: 33 × 10¹ Ω = 330 Ω ±5%

2 Color Code Reference

Color	Digit	Multiplier	Tolerance
Black	0	× 1 (10^0)	—
Brown	1	× 10 (10^1)	±1%
Red	2	× 100 (10^2)	±2%
Orange	3	× 1,000 (10^3)	—
Yellow	4	× 10,000 (10^4)	—
Green	5	× 100,000 (10^5)	±0.5%
Blue	6	× 1,000,000 (10^6)	±0.25%
Violet	7	× 10,000,000 (10^7)	±0.1%
Gray	8		
White	9	—	—
Gold	—	× 0.1 (10^{-1})	±5%
Silver	—	× 0.01 (10^{-2})	±10%

3 Verify with a Digital Multimeter



- ✓ Set the DMM to resistance (Ω).
- ✓ Measure across the resistor.
- ✓ The measured value should be close to the nominal value (within the tolerance).

4 Check the Tolerance Range

Nominal value: 330 Ω | **Tolerance: ±5%** → **Allowed range: 313.5 Ω – 346.5 Ω**

✓ **Measured value: 328.7 Ω ✓ (within tolerance)**

Four-, five-, and six-band resistors

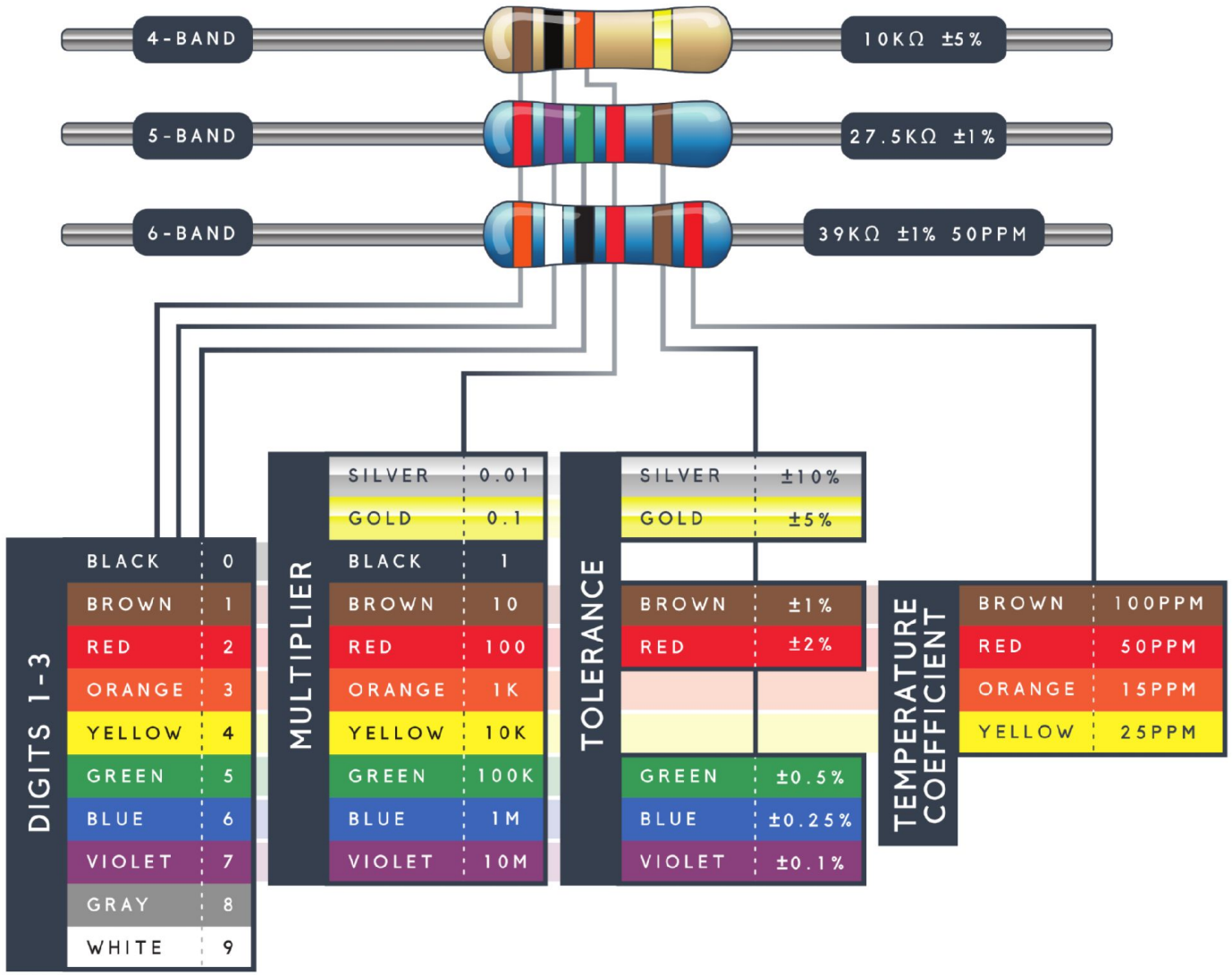

Practice with nine resistors

Read the bands and record each nominal resistance.

Include Ω, kΩ, or MΩ with every answer.

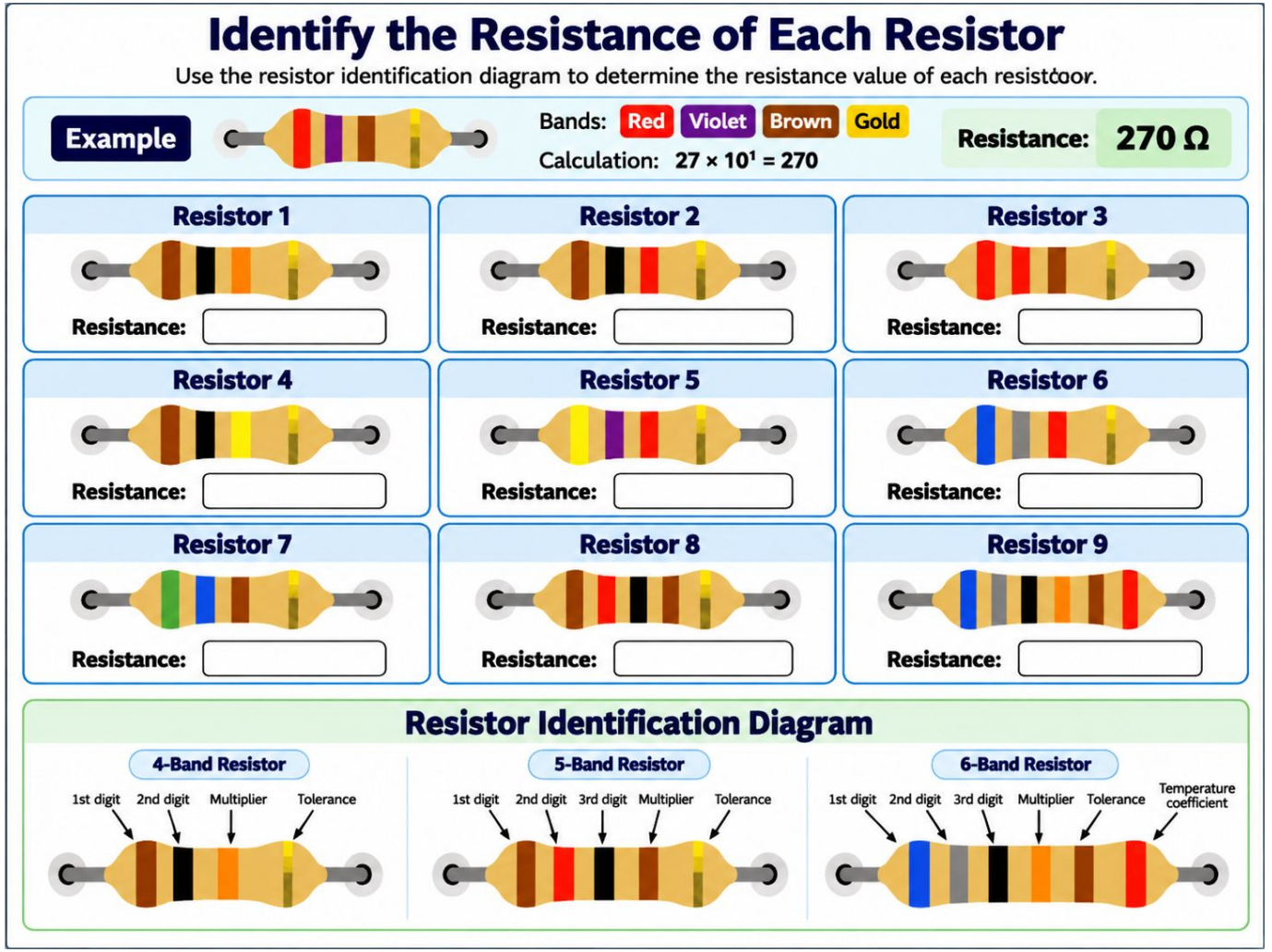

Anode, cathode, and the LED symbol

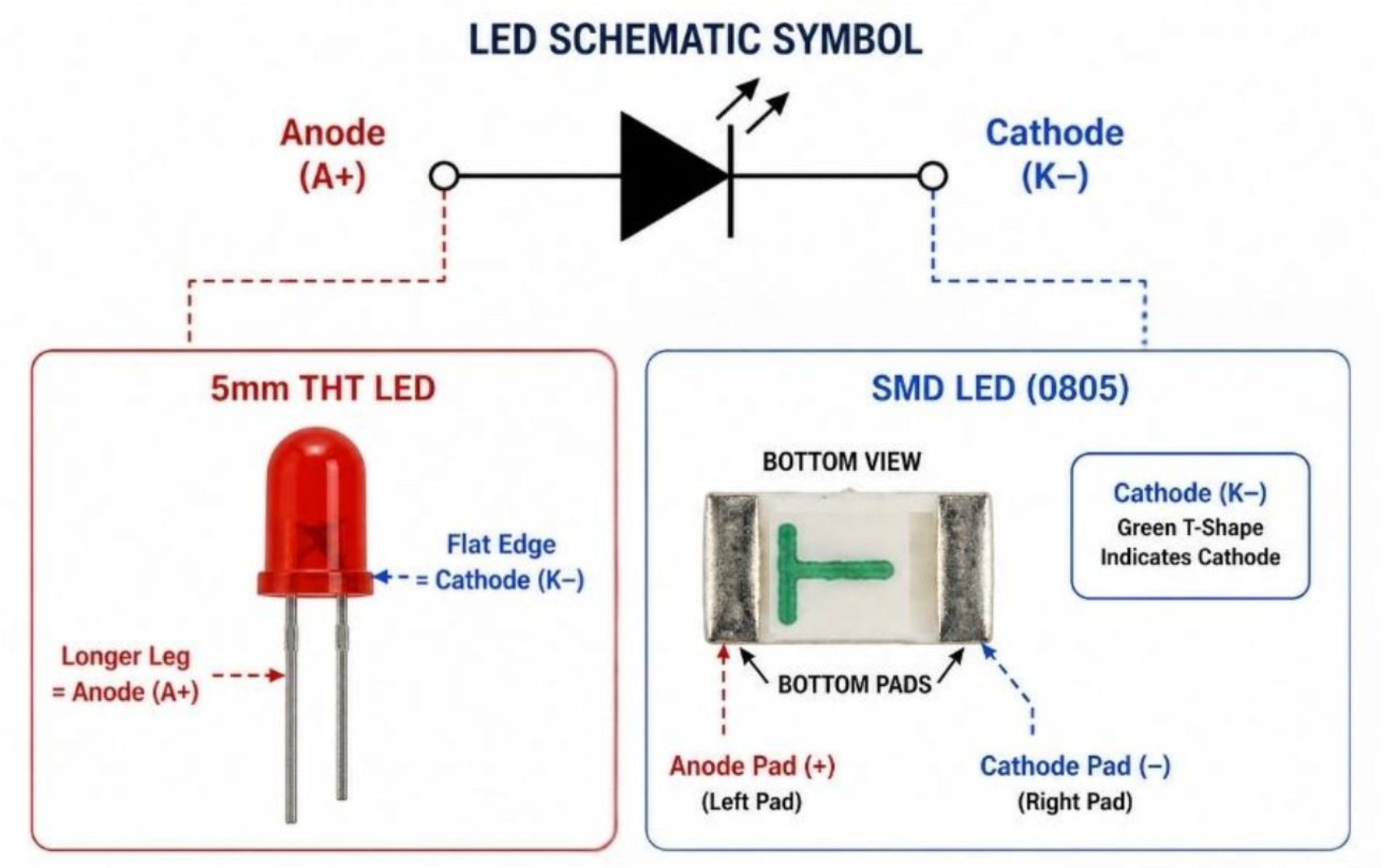

LED (Light-Emitting Diode): Polarity and Identification

An LED is **polarized**. It only works when connected in the correct direction.

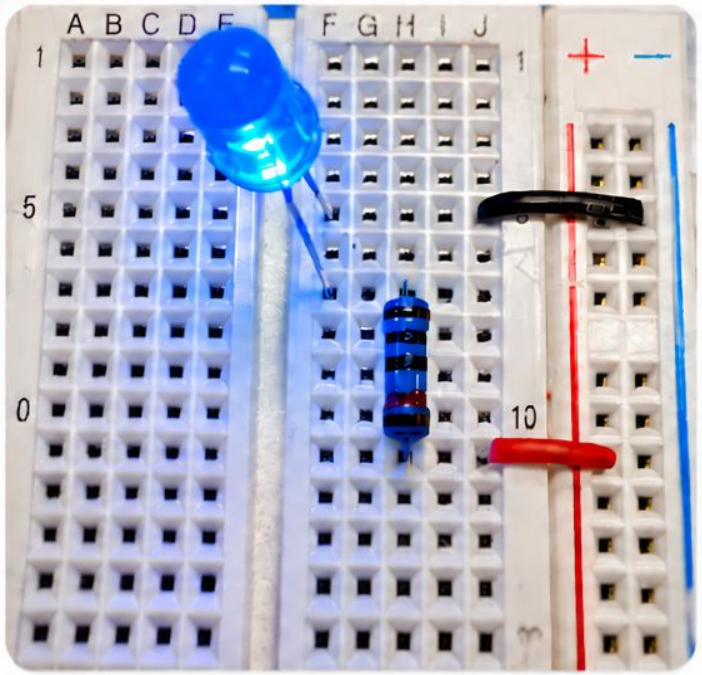

Three Ways to Identify LED Polarity

1 Leg Length

- Longer leg = **Anode (+)**
- Shorter leg = **Cathode (–)**

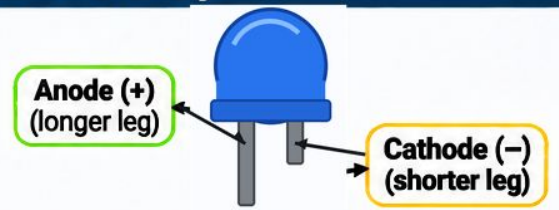

2 Flat Side

- Flat side = **Cathode (–)**
- Rounded side = **Anode (+)**

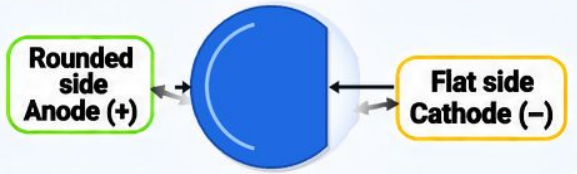

3 Internal Structure

- Smaller internal part = **Anode (+)**
- Larger internal part = **Cathode (–)**



Correct Connection

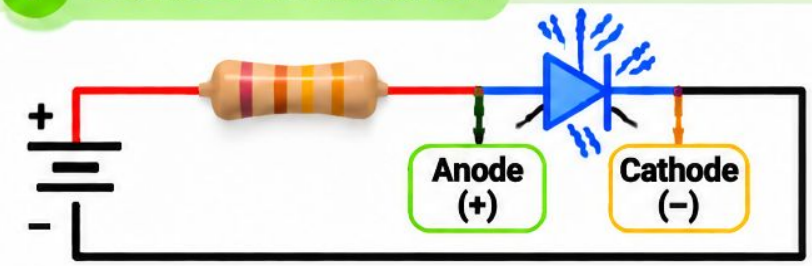

Connection Rule:

Connect the **anode (+)** to the **source side (positive)** and the **cathode (–)** to the **ground side (negative)**.

Why LED Polarity Matters

Same battery. What happens when you flip the LED?

LED lights

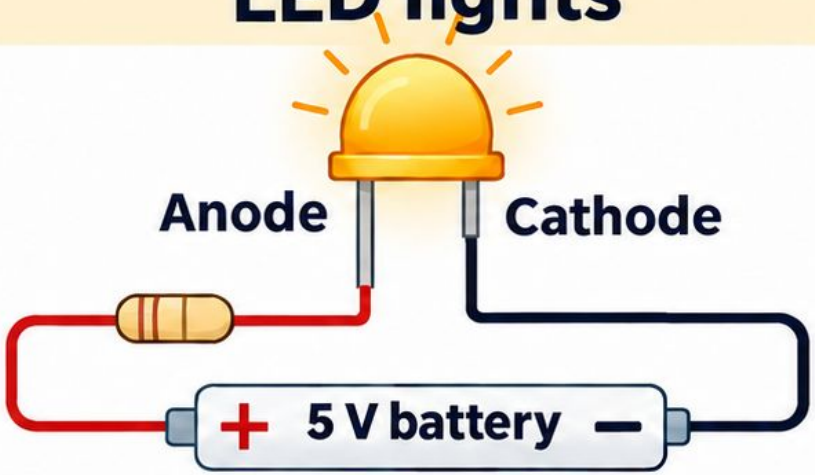

LED stays off

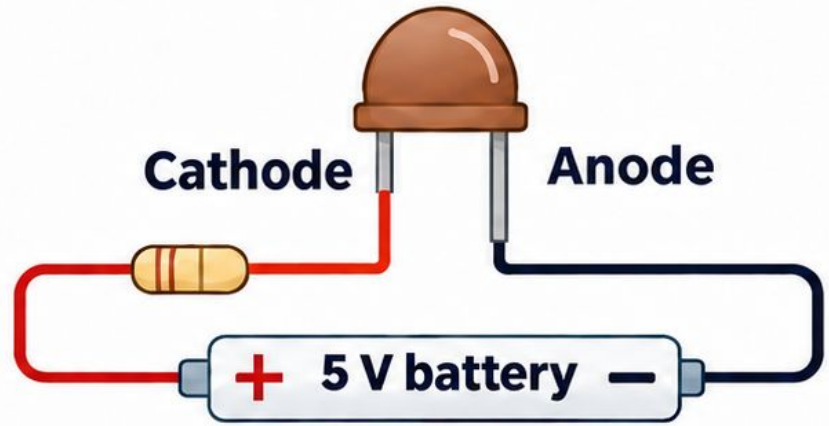

Water pushes from the left in both pipes.

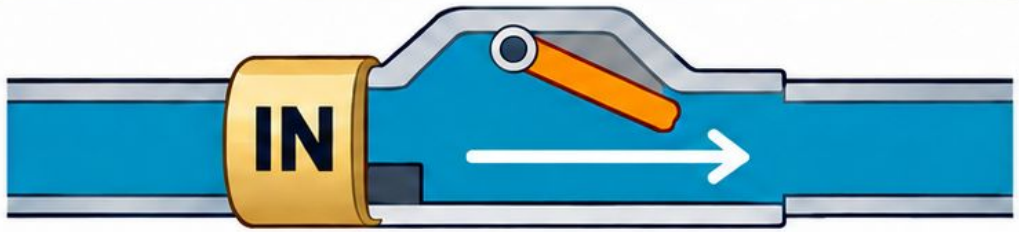

Flap opens. Water flows.

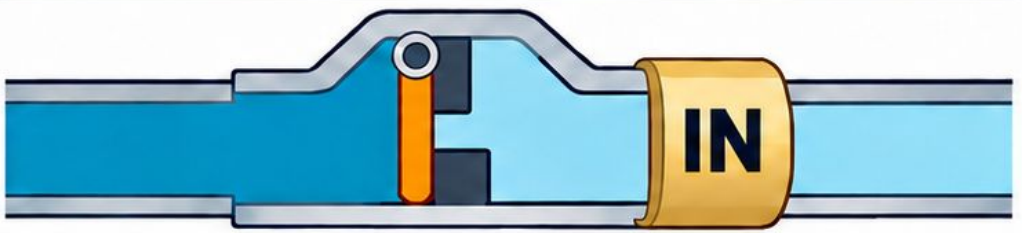

Flap stays shut. No flow.

How an LED Makes Light

From a device to the physics inside

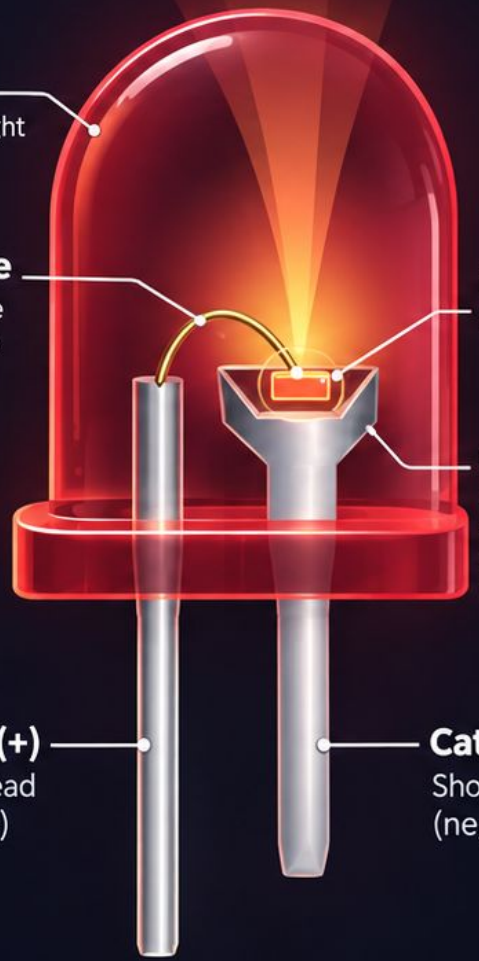

Lens
Directs the light outward

Bond wire
Connects the anode (+) to the chip

LED chip
(Semiconductor)

Reflector cup
Reflects light and connects the chip base to the cathode (–)

Anode (+)
Longer lead (positive)

Cathode (–)
Shorter lead (negative)

Inside the Chip

A simplified view of the semiconductor and energy levels

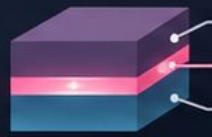

P-type (holes, +)
Active region
N-type (electrons, –)

Energy Bands in an LED

Higher energy

Conduction band
(electrons can move)

Band gap
(energy difference)

Valence band
(usually filled)

Lower energy

Before recombination

Electron
(higher energy)

Hole
(missing electron)

During recombination

Photon
(light)

Hole filled
(energy released as light)

What is a hole?

A hole is the absence of an electron in the valence band. It behaves like a positive charge carrier.

Why different colors?

Blue — larger band gap (higher energy)
Green — medium band gap
Red — smaller band gap (lower energy)

When an LED is forward-biased, electrons and holes meet in the **active region** of the semiconductor. An electron can transition to a lower-energy state, filling a hole and releasing energy as a **photon** — a tiny packet of light. The energy difference (**band gap**) helps determine the color of the light produced.

The connections beneath the plastic

Breadboard Function

Electric component leads and the wire used to connect them are inserted into holes that are arranged in a grid pattern on the surface of the breadboard

A series of internal metal strips serve as jumper wires that connect specific rows of holes

Top View

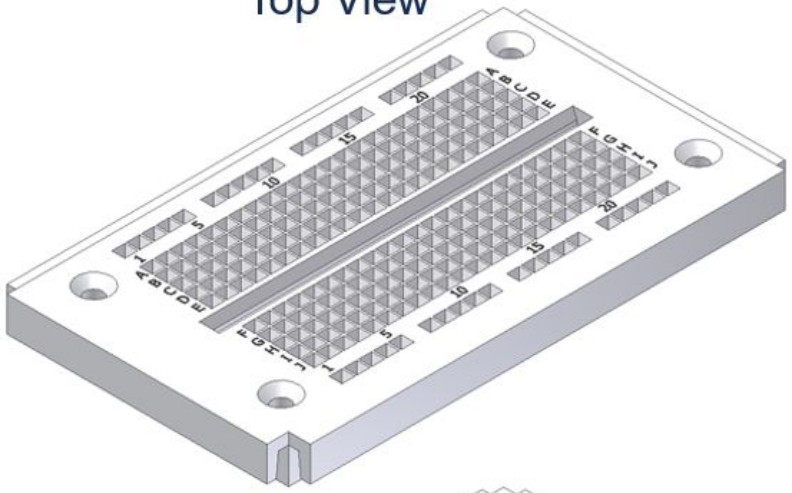

Cut-Away View

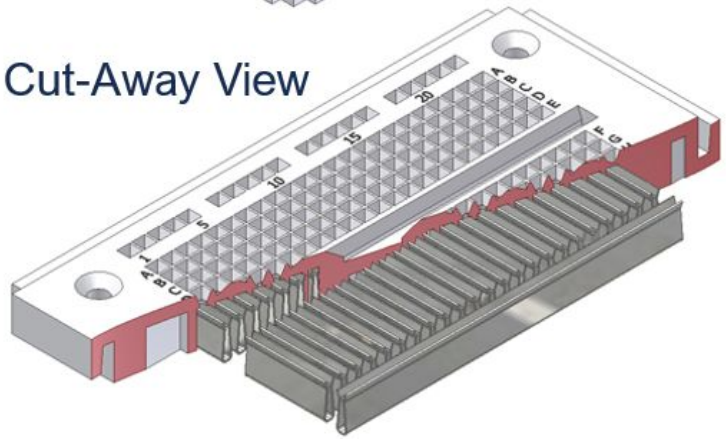

Which holes share a connection?

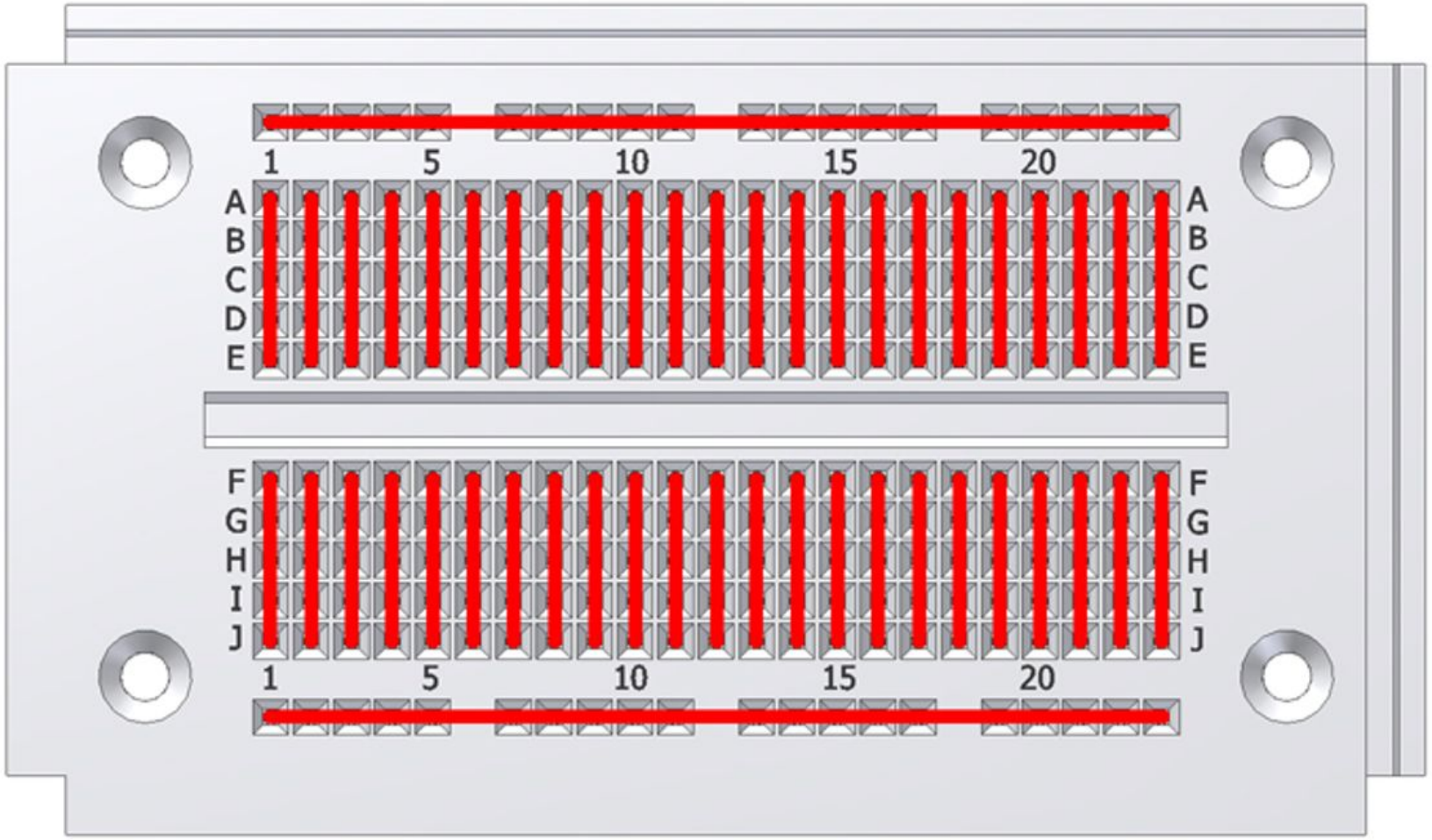

A breadboard with the backing removed

Find the metal that joins a group of holes.

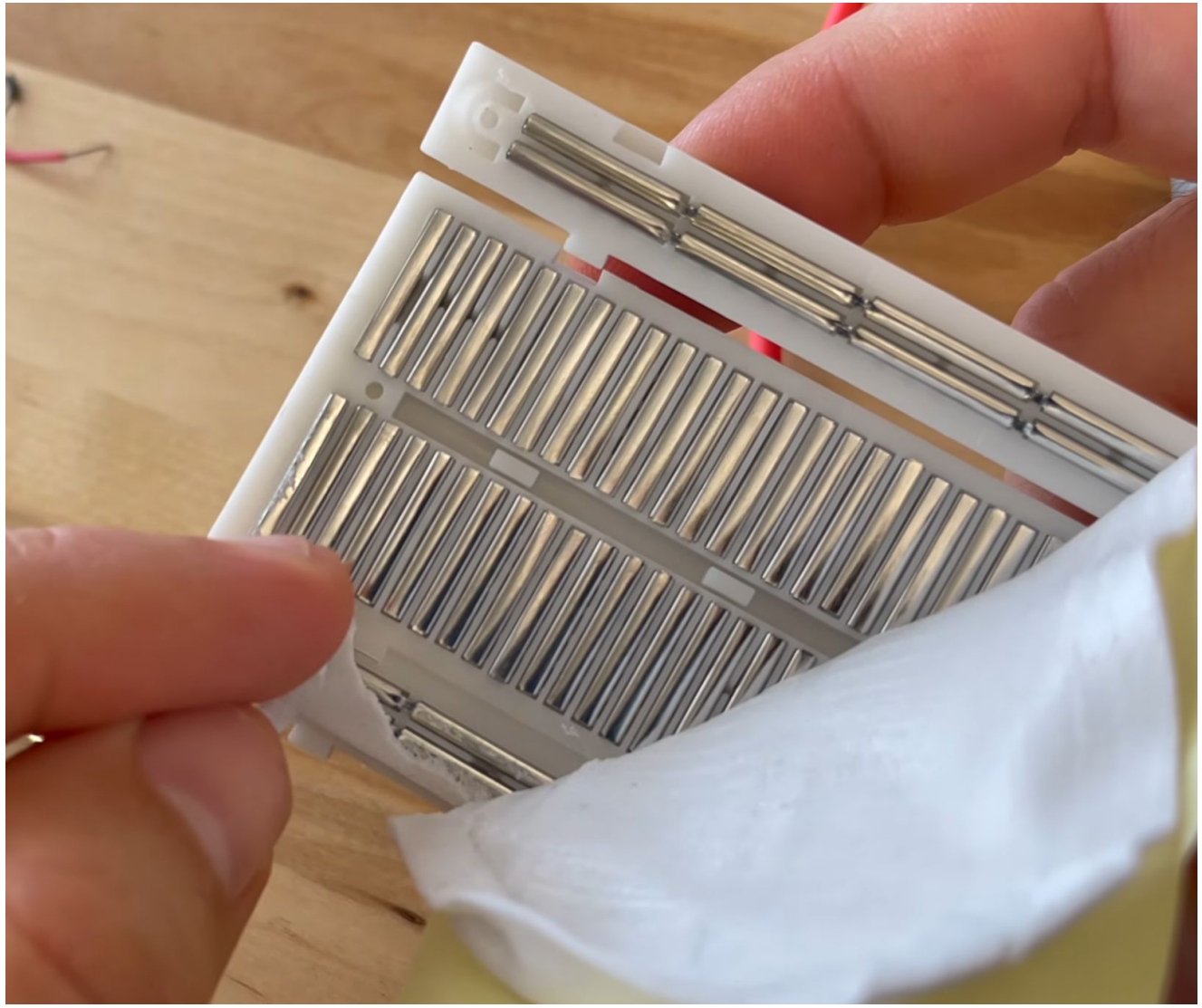

Rails, terminal strips, and the center gap

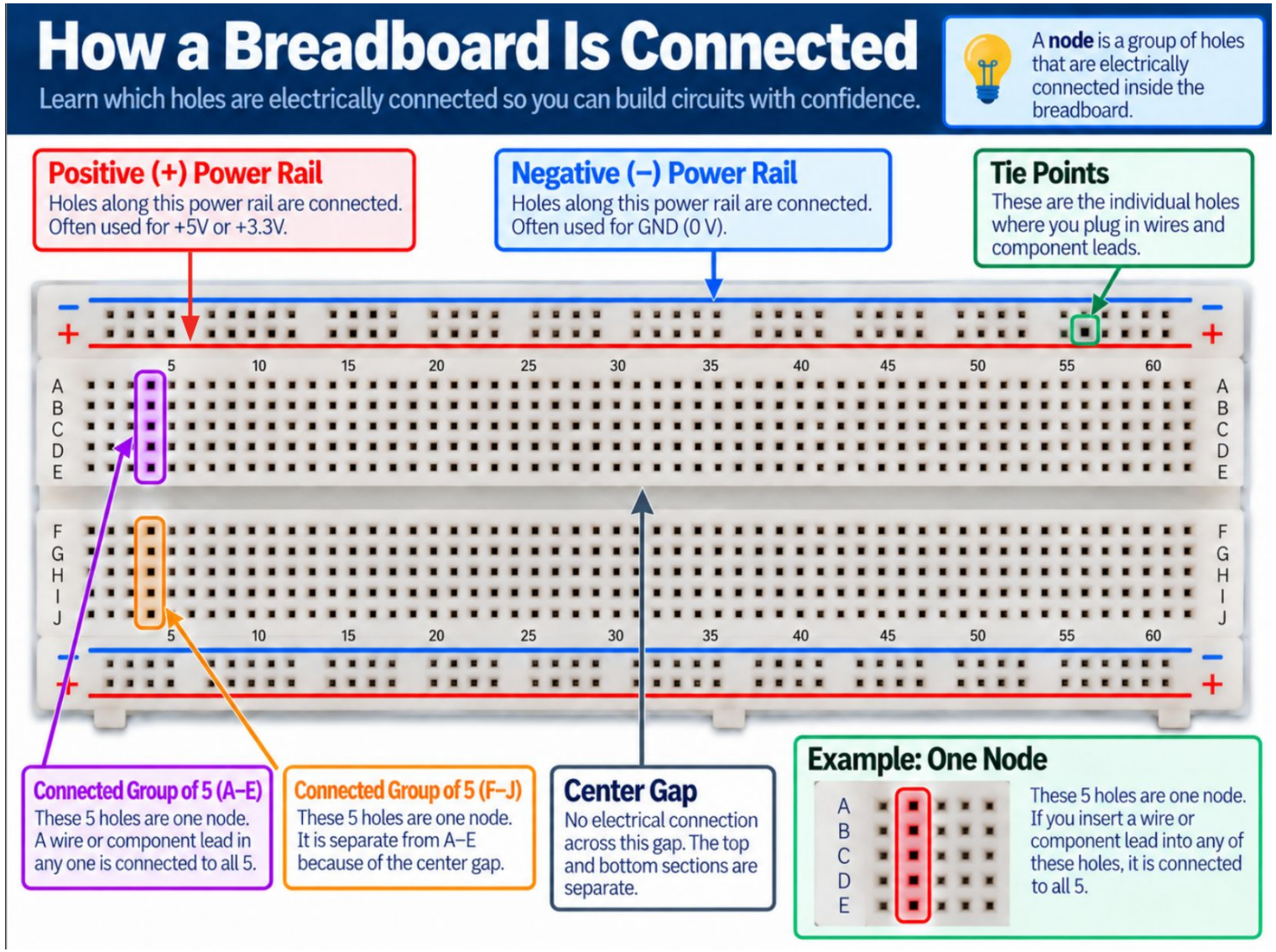

Circuit analysis A–F

Which circuit works?

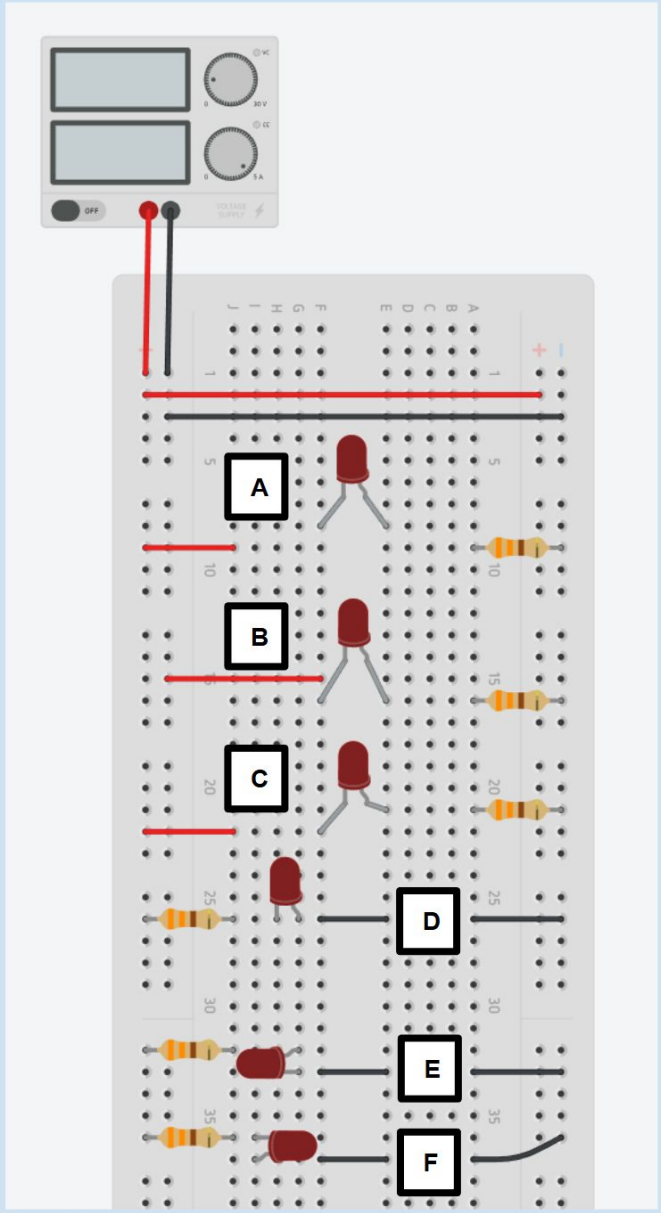

Circuit Diagram

Each component has a symbol that can be used to create a circuit diagram:

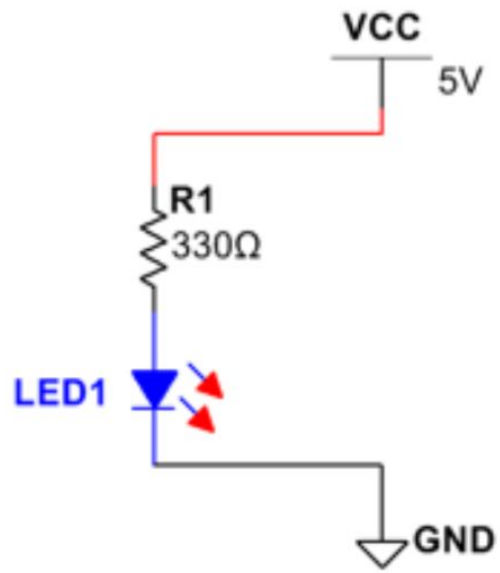

Diagrams and calculations help a designer test circuit characteristics before prototyping or breadboarding the circuit

Schematic symbols and conventional current

Circuit Diagram Symbols

Analog Power Sources

Voltage Source 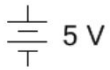

Ground 

Digital Power Sources

Voltage Source 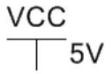

Digital Ground 

Discrete Components

Resistor 

Light Emitting Diode 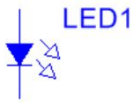

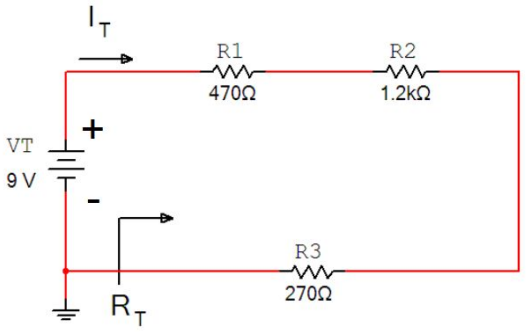

In this circuit example, imagine the flow of conventional current to be a positive charge (+) moving from the positive terminal of the battery to the negative terminal of the battery or ground

A circuit must have a complete path from voltage source to ground

Two breadboard layouts

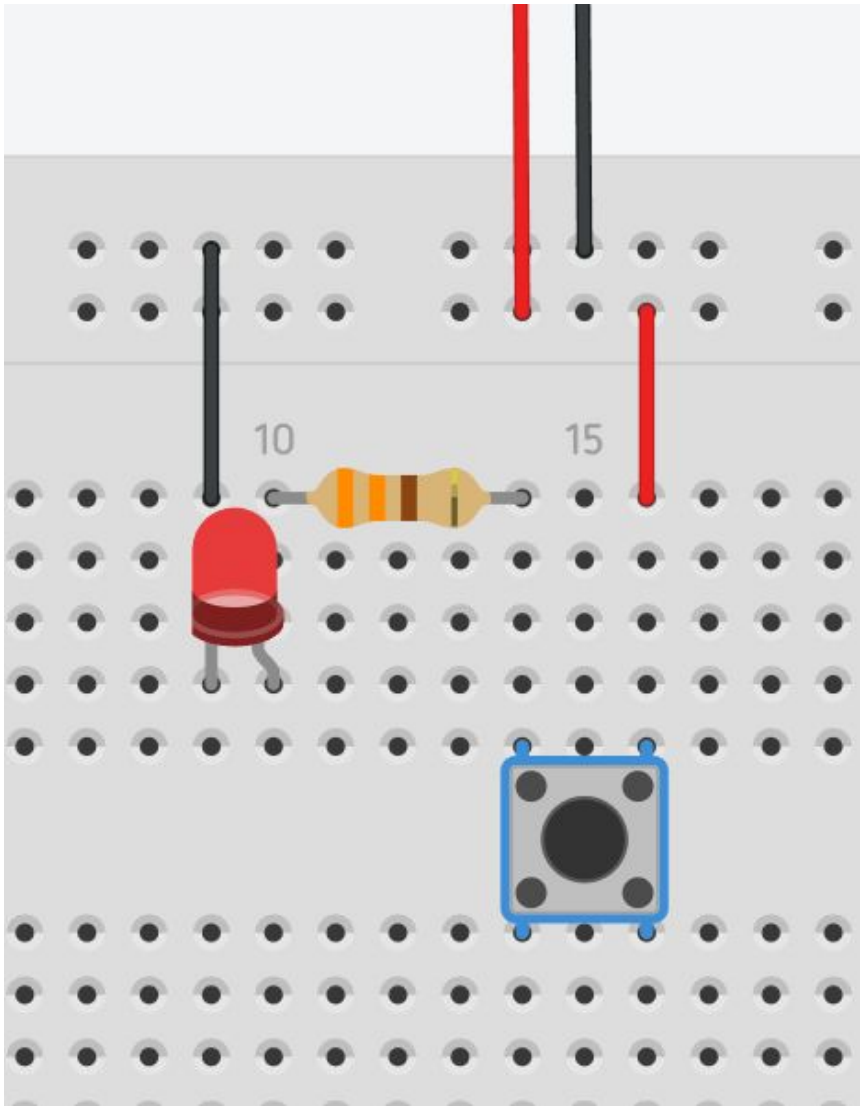

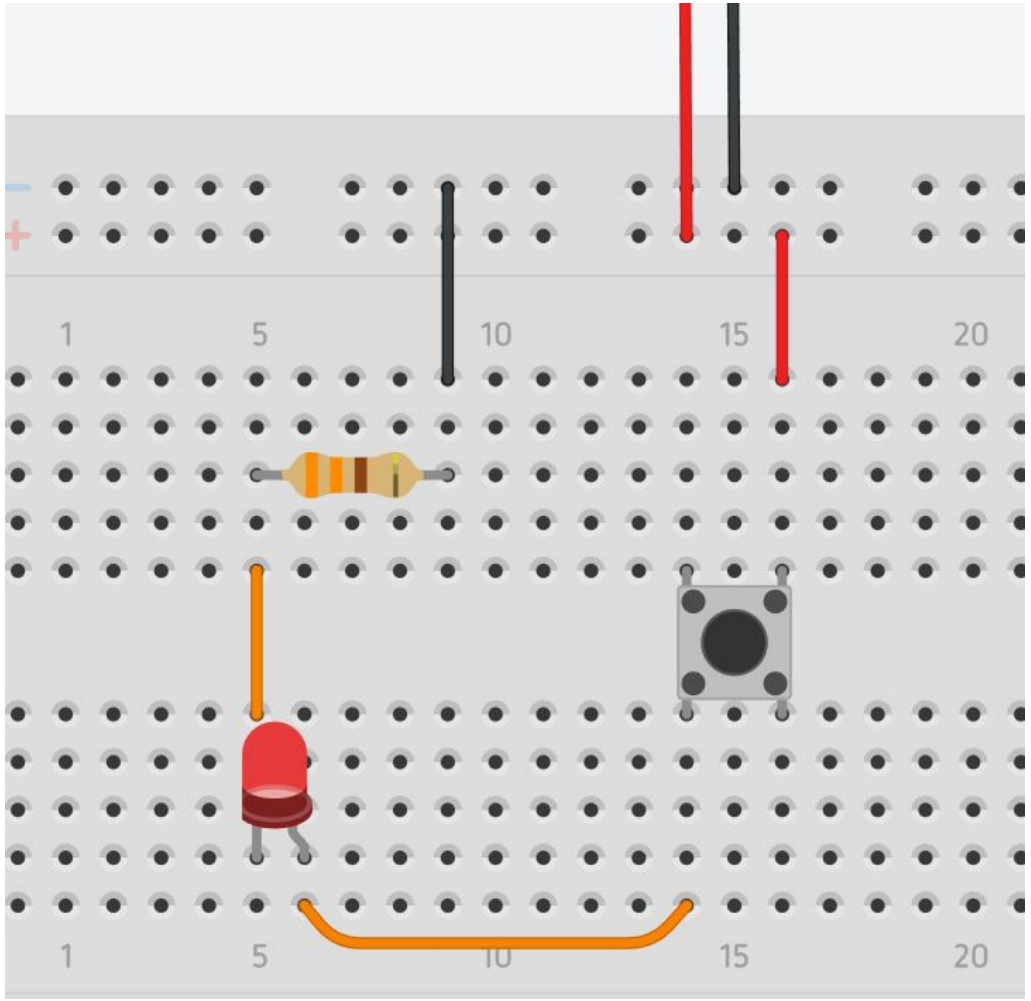

Schematic for the push-button circuit

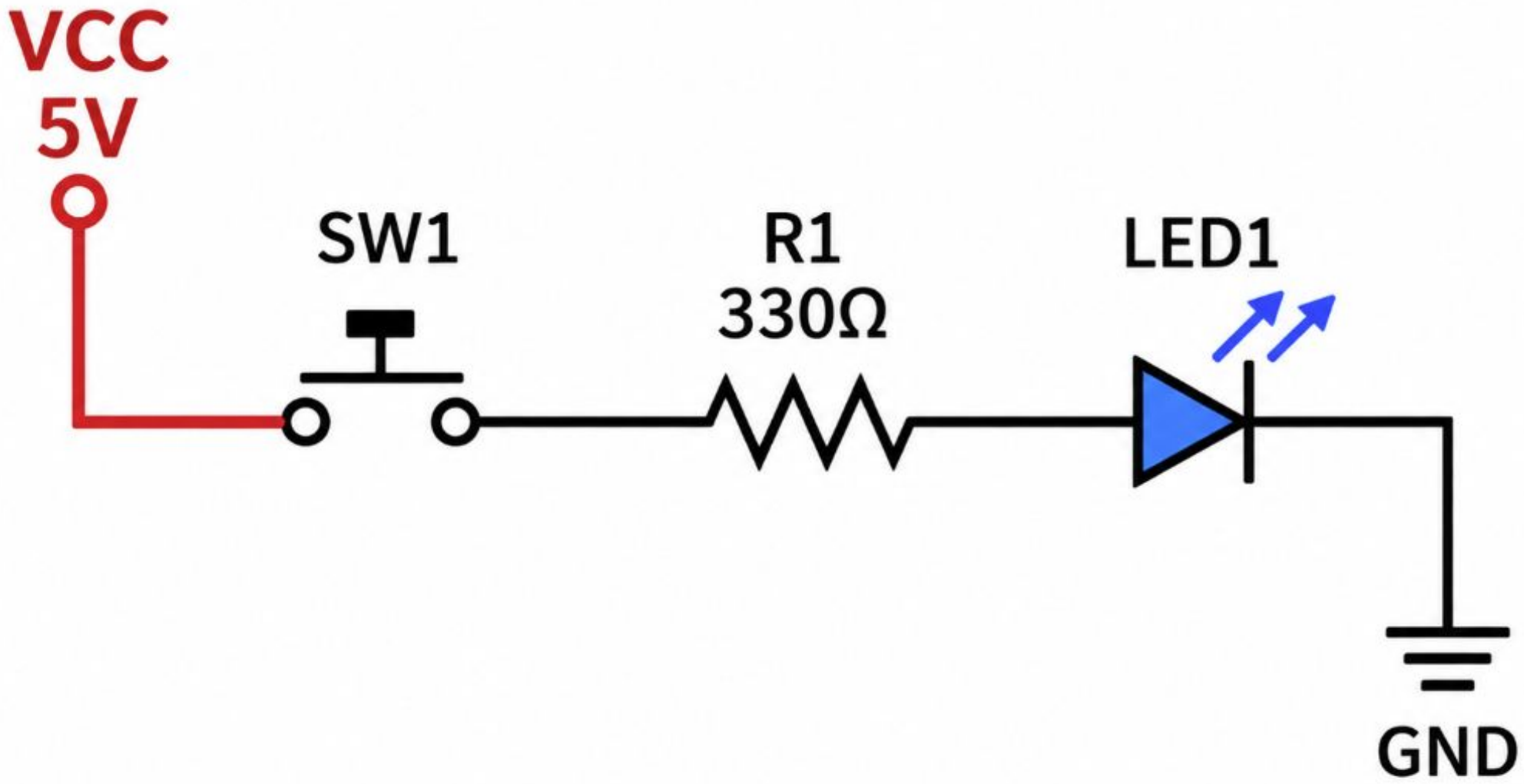

Tinkercad class and circuit setup

Sign in	Open tinkercad.com and sign in with your class-approved account.
Join your class	Use the link or class code your teacher provides.
Create the circuit	Open Circuits and name a blank project Hello World Circuit.

Setup screenshots

Screenshot 1	Show that you joined the Tinkercad class.
Screenshot 2	Show the blank Hello World Circuit with its name visible.

Add a short caption under each screenshot.

The Hello World Circuit

Set the Tinkercad supply to 5.0 V and the resistor to 330 Ω.

Add a breadboard, DC supply, LED, resistor, and jumper wires.

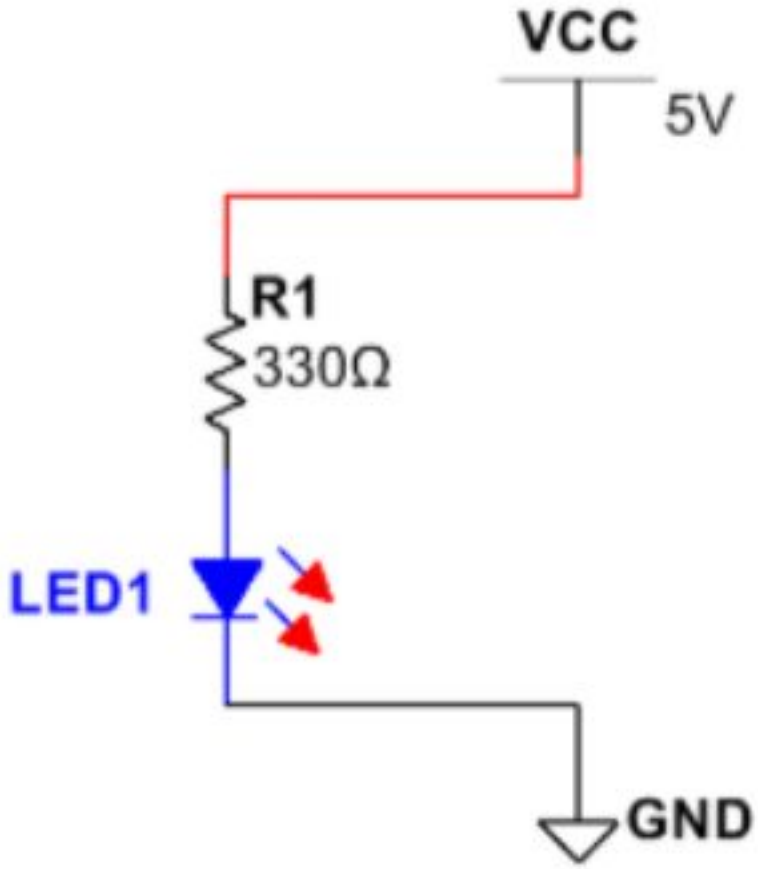

Baseline Circuit

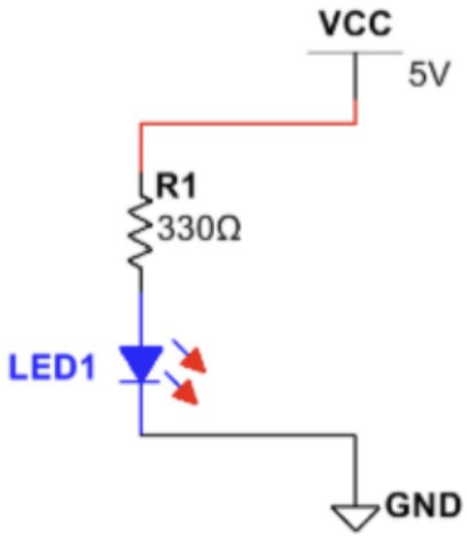

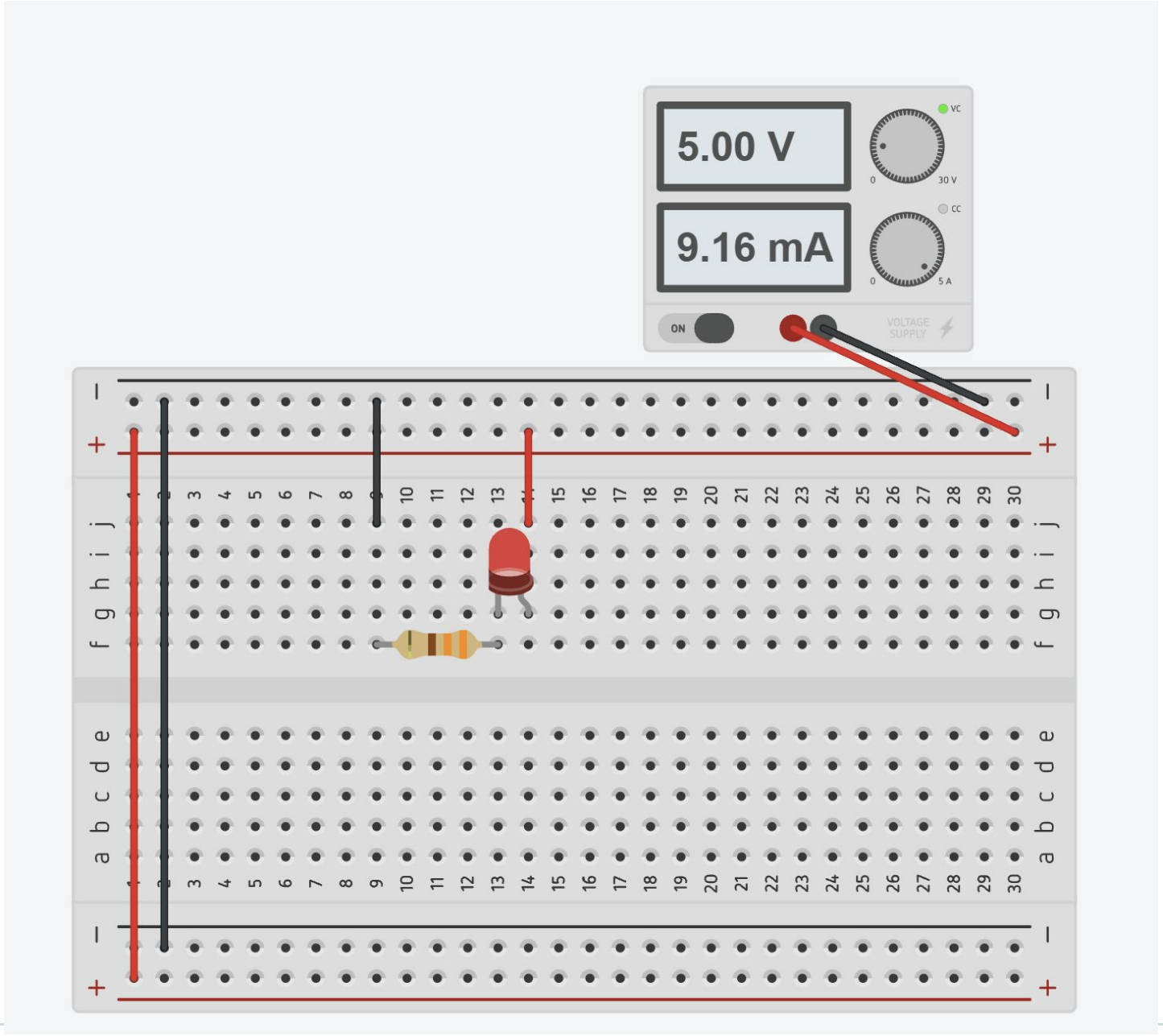

An optional switch

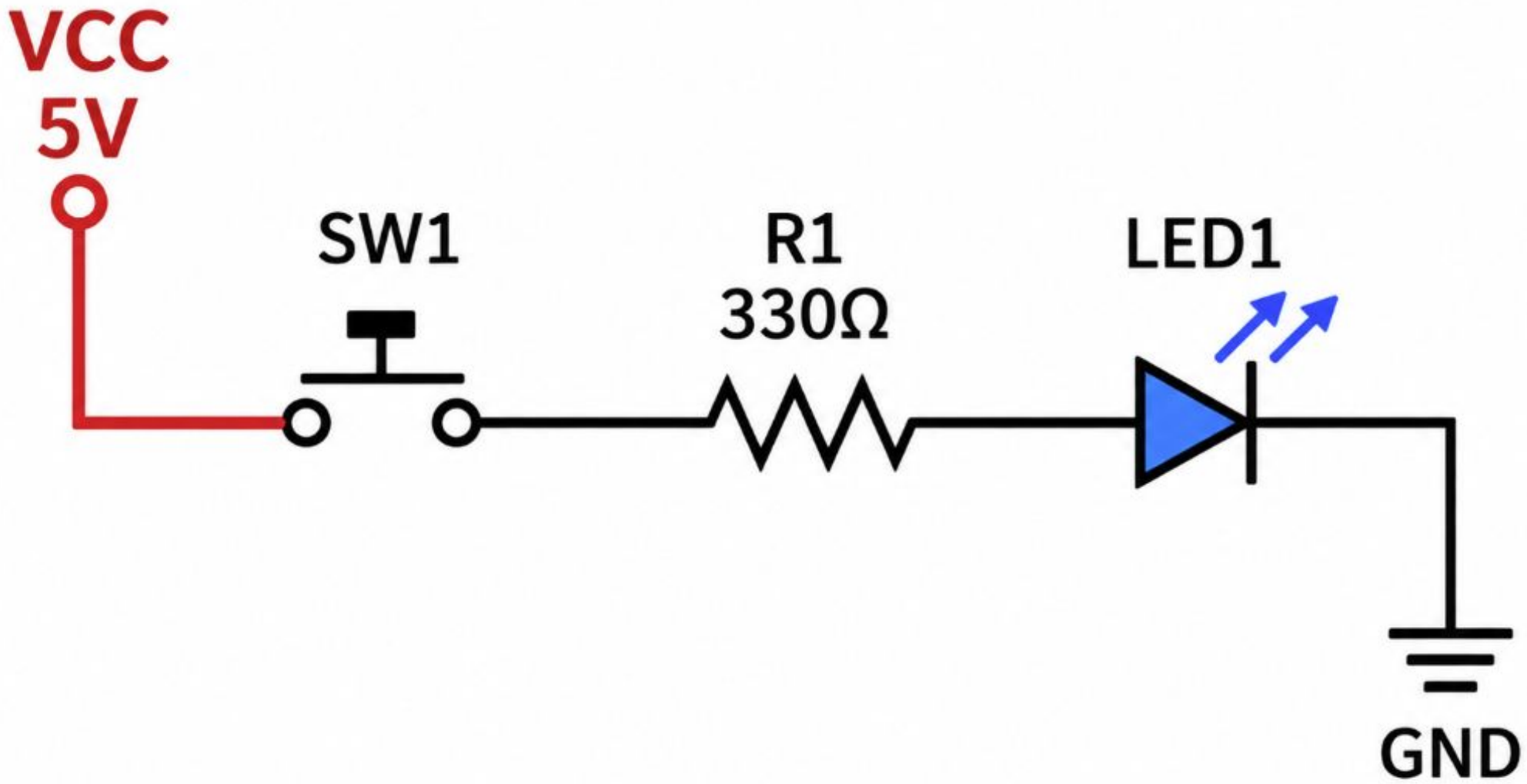

An optional switch

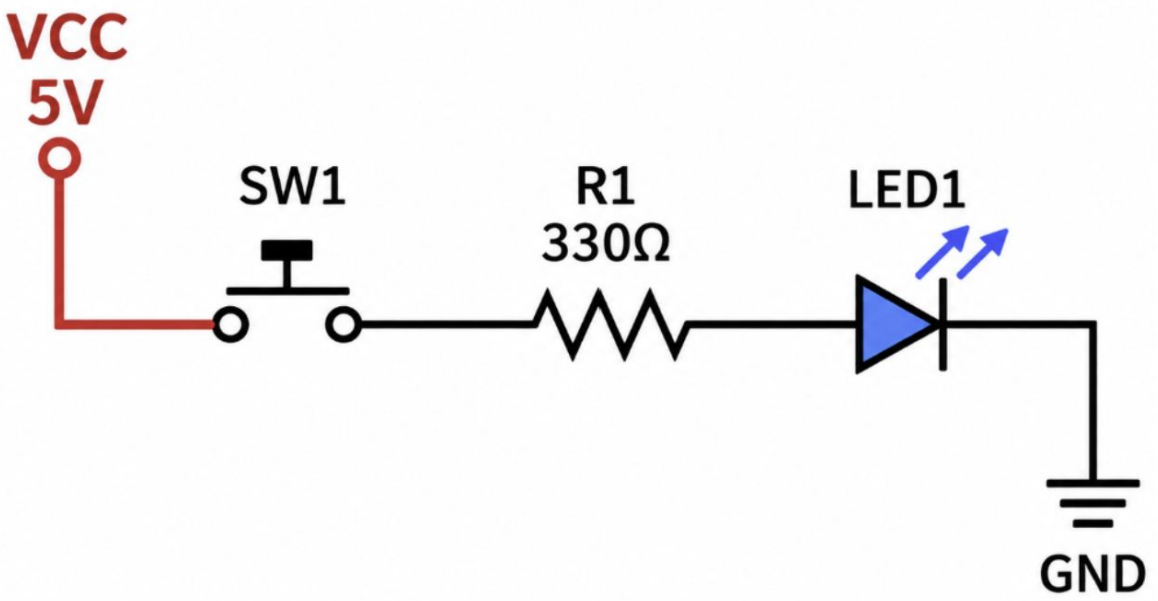

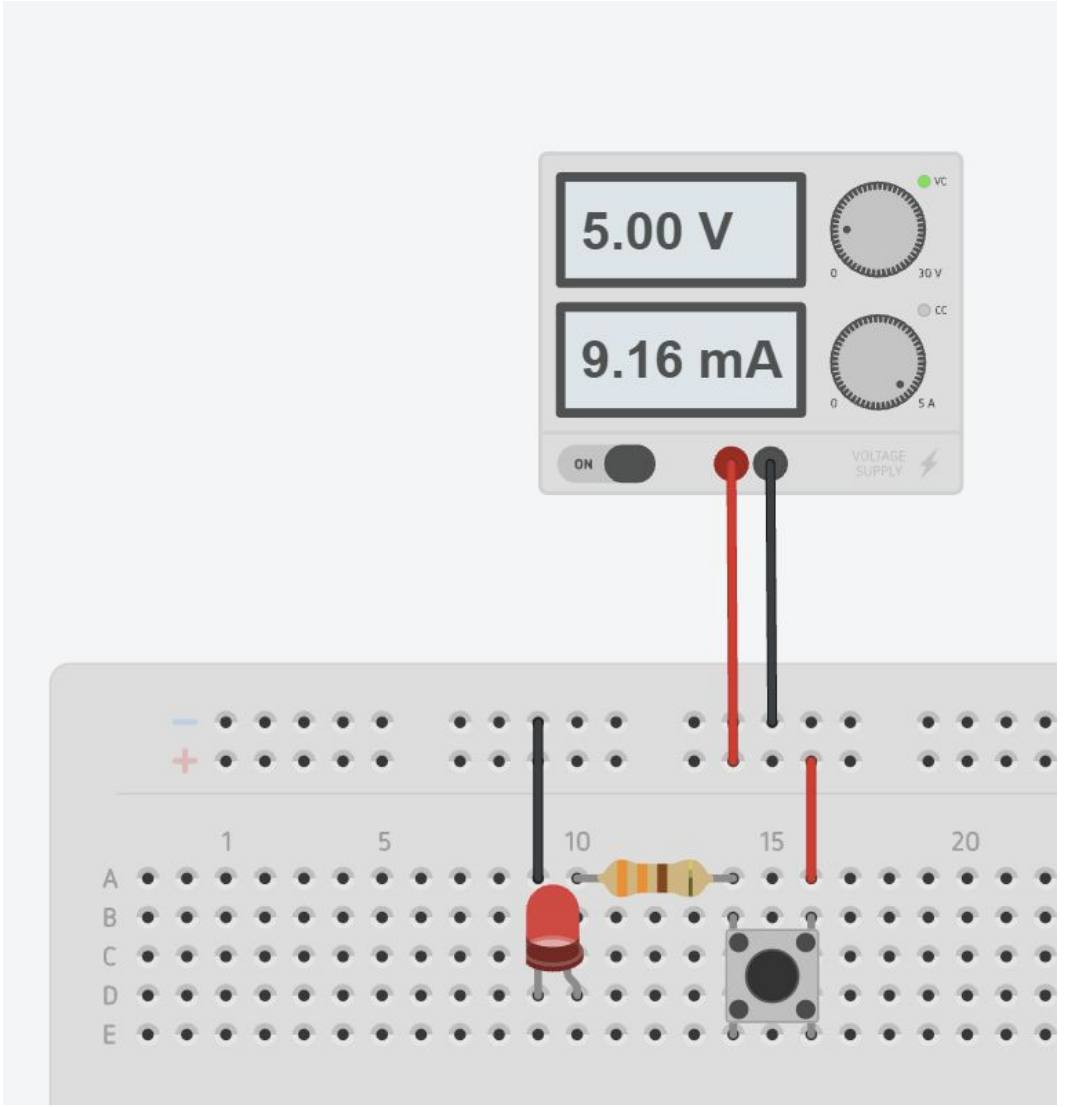

Connections inside a push button

Which pins already share a connection? Which connection changes when you press?

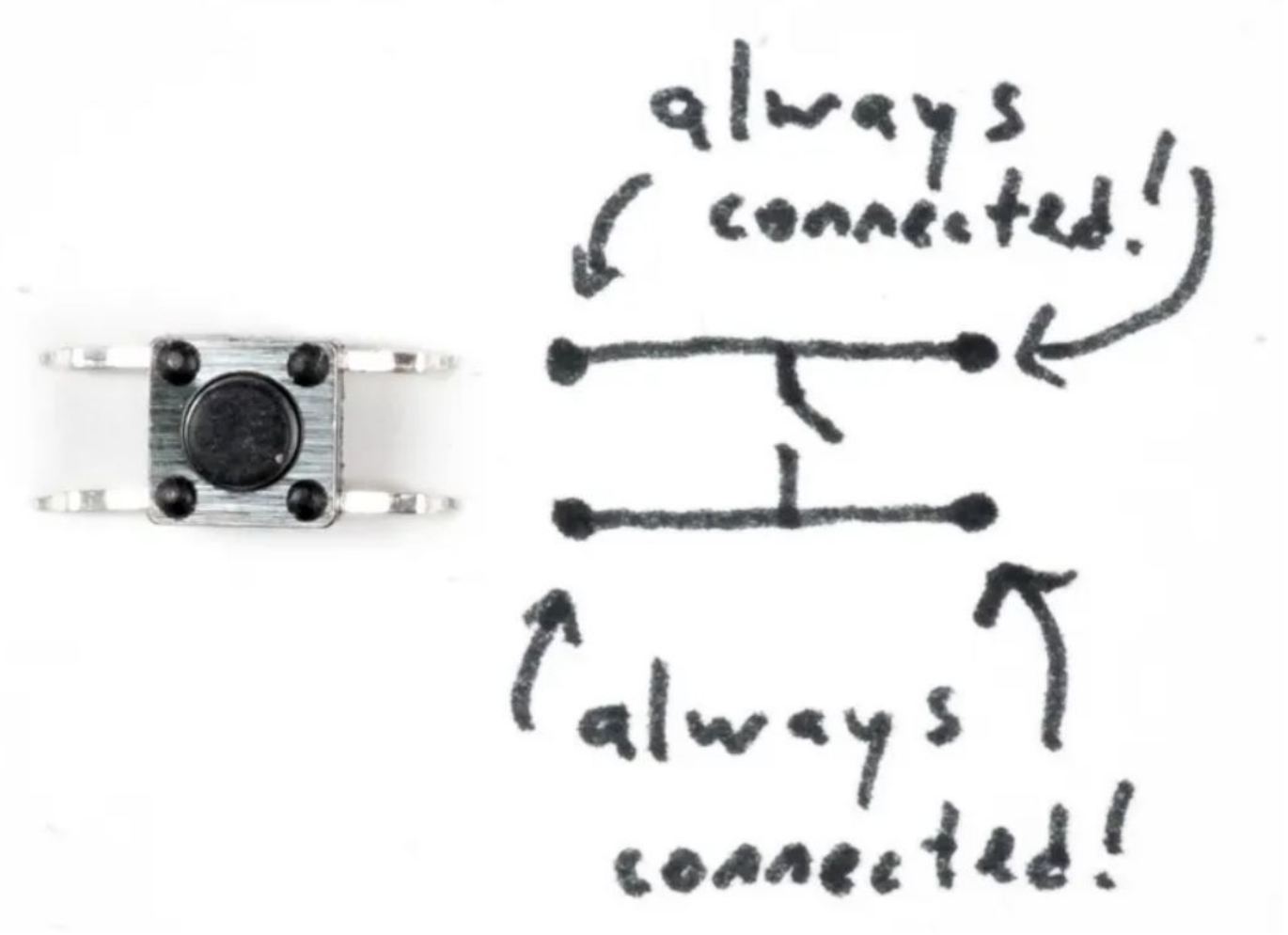

The series path in Tinkercad

Power nodes	Connect +5.0 V to the positive rail and 0 V to the return rail.
Resistor	Place the 330 Ω resistor in the series path.
LED	Place the anode on the resistor side and the cathode toward 0 V.
Simulation	Start the simulation and trace each connection against the schematic.

The deliberately broken circuit

Introduce faults	Reverse the LED and make three other changes that would each prevent operation.
Capture the result	Take a screenshot of the deliberately broken circuit.
Diagnose	Name each change, why it stops the circuit, and how you identified it.

The restored circuit

Restore	Run the simulation again with the LED illuminated.
Capture	Show the running circuit and the project name in the same screenshot.
Explain	Trace the electrical path and explain why it now matches the schematic.

Simulation vocabulary

Circuit diagram	Schematic, series, VCC, ground
Electrical quantities	Voltage, resistance
Testing	Simulation, troubleshoot

Bench power before wiring

Set the physical supply to 4.5 V.

Keep its output off while you wire or change the circuit. Inspect before turning it on.



Jumper fabrication 1 · Strip the first end

Making connections on a breadboard with wire



Unravel some wire

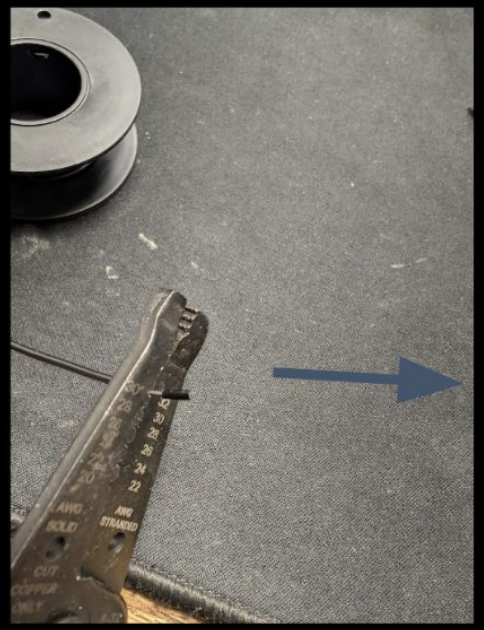

Use the wire stripper to remove some insulation from the end.



Jumper fabrication 2 · Bend and mark



Bend the end at a 90 degree angle.

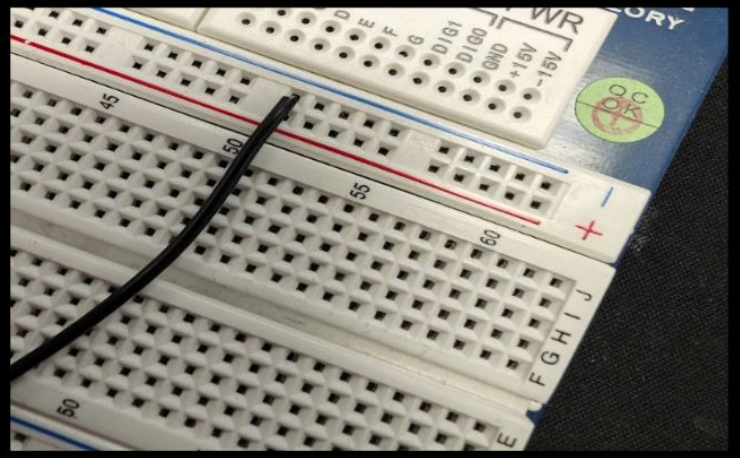

Place the bent end into the hole and across the row you want.

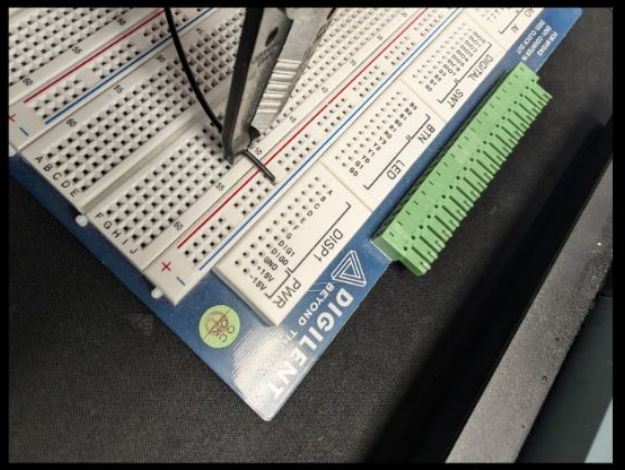

Use the wire strippers to make a mark at the hole you want the wire to fit into.

Jumper fabrication 3 · Cut and fit



Strip the wire at the mark you made with the wire strippers.



Cut beyond the stripped section to have enough to place into the breadboard



Remove the insulation and cut to proper length, then bend



Short, routed jumper wires

What makes these wires easier to trace?

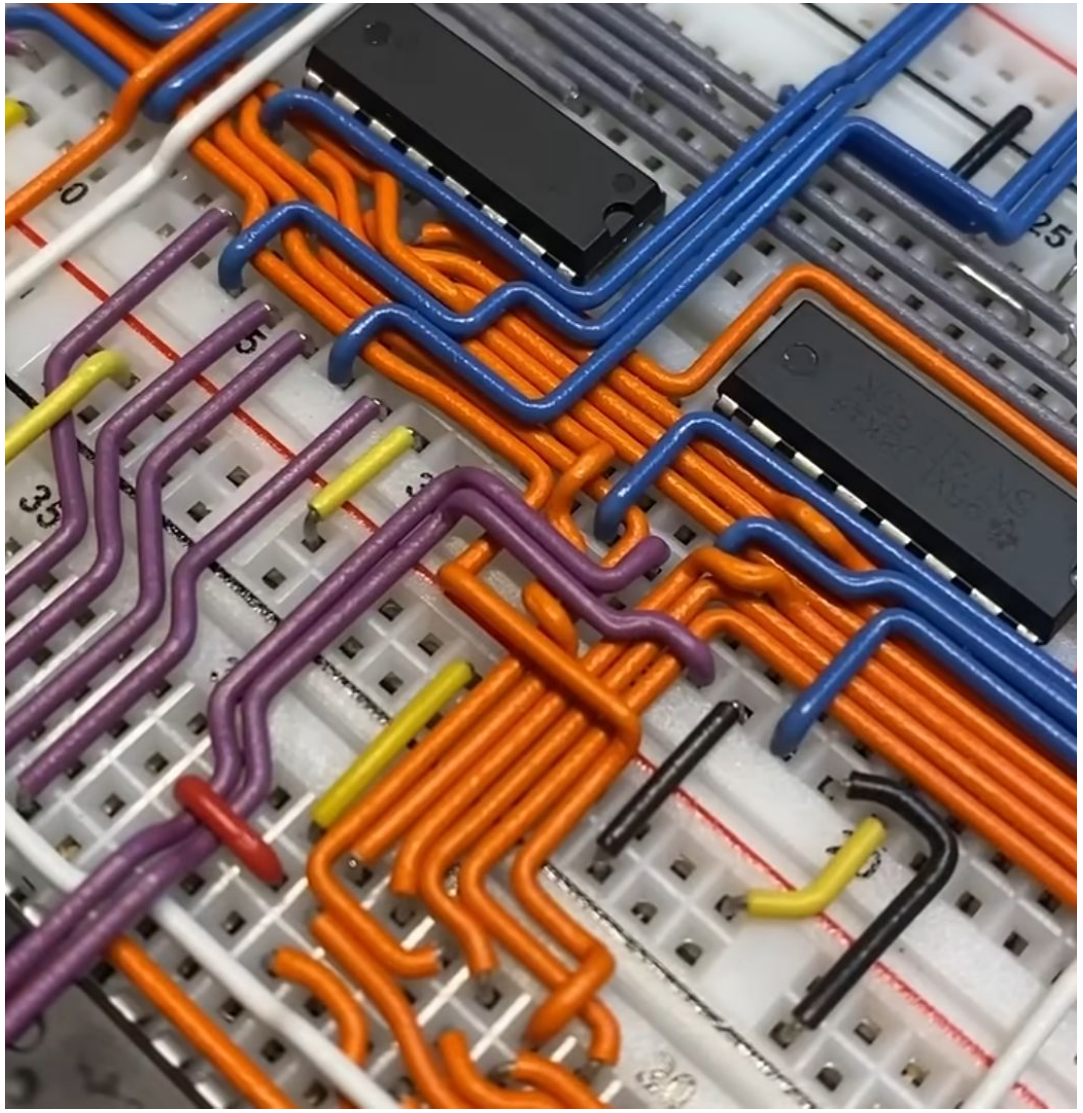

The two rail jumpers

Connect each rail to a different node on the terminal strip.

Take a close-up that shows where each jumper starts and ends.

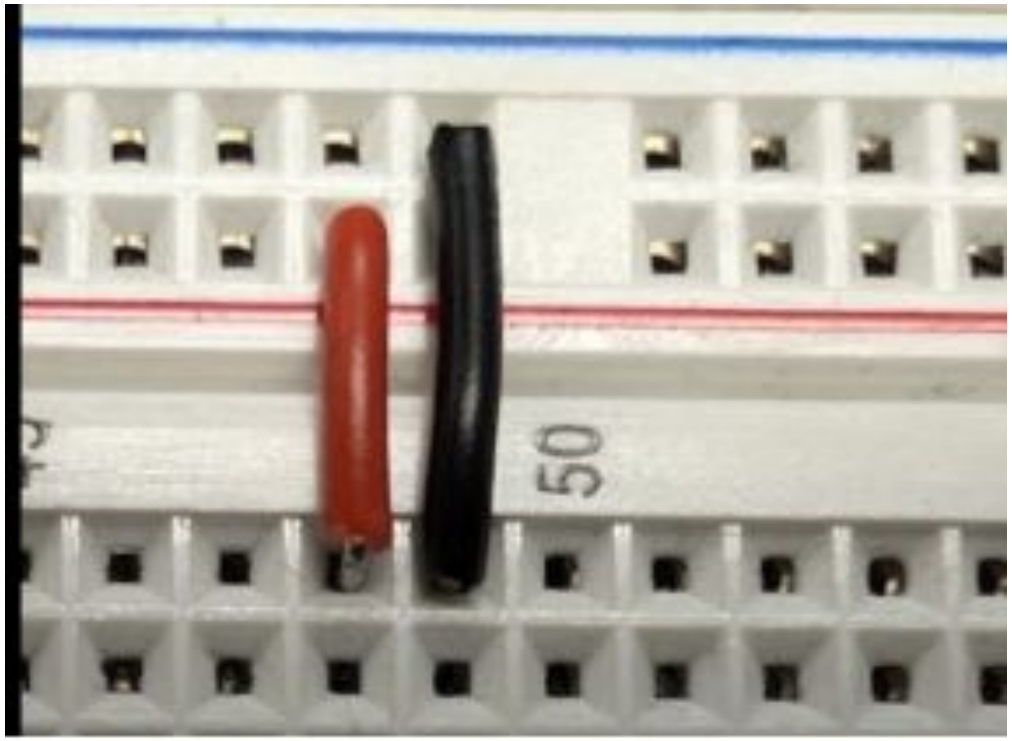

Jumper evidence

Before installation	Show both jumpers with their bends and stripped ends visible.
After installation	Show the positive and ground rails connected to separate nodes.
Explanation	Show how you sized the wires, why the nodes are separate, and how you checked the fit.

Jumper and breadboard vocabulary

Breadboard	Power rail, ground rail, rail, terminal strip
Jumper wiring	Jumper wire, connection point
Circuit tracing	Electrical path, return path

Wiring you can inspect

Breadboard Connections:

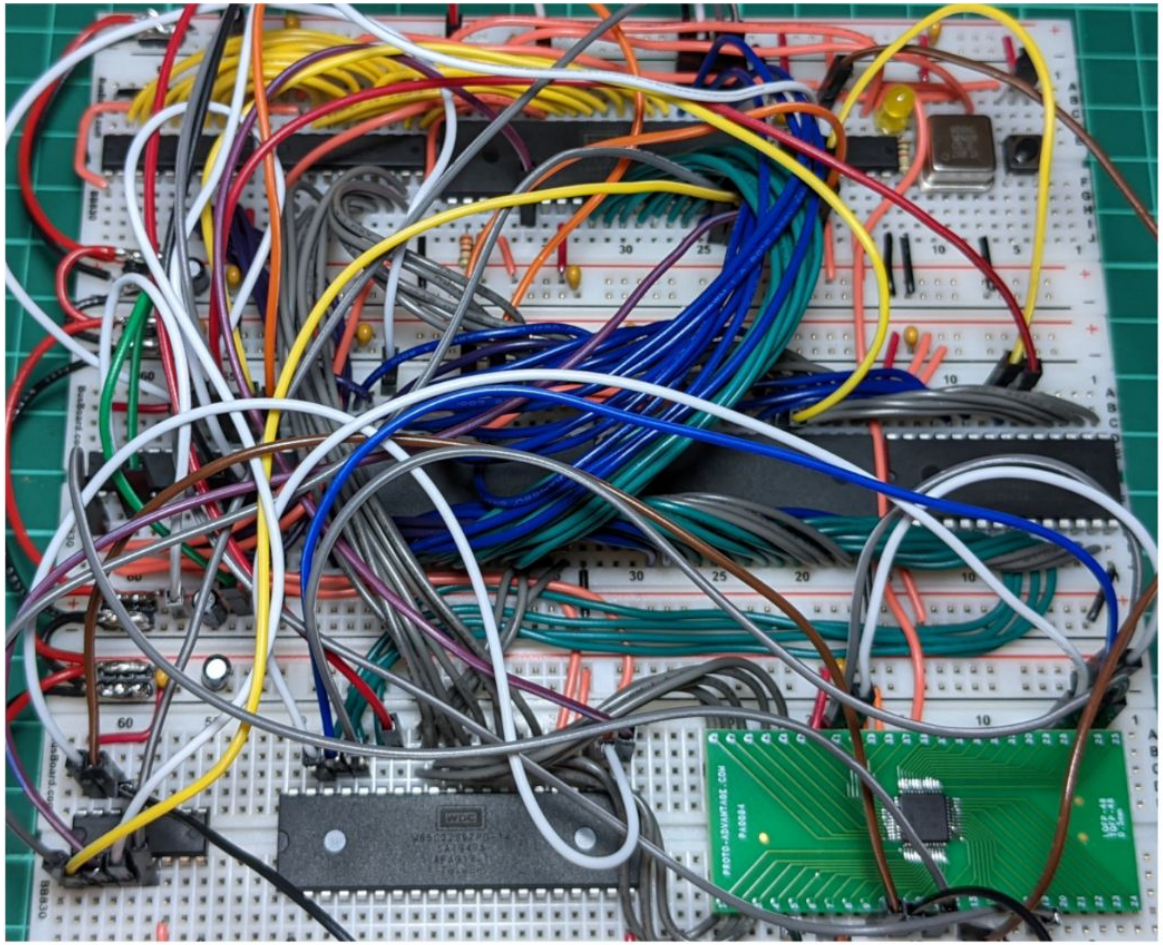

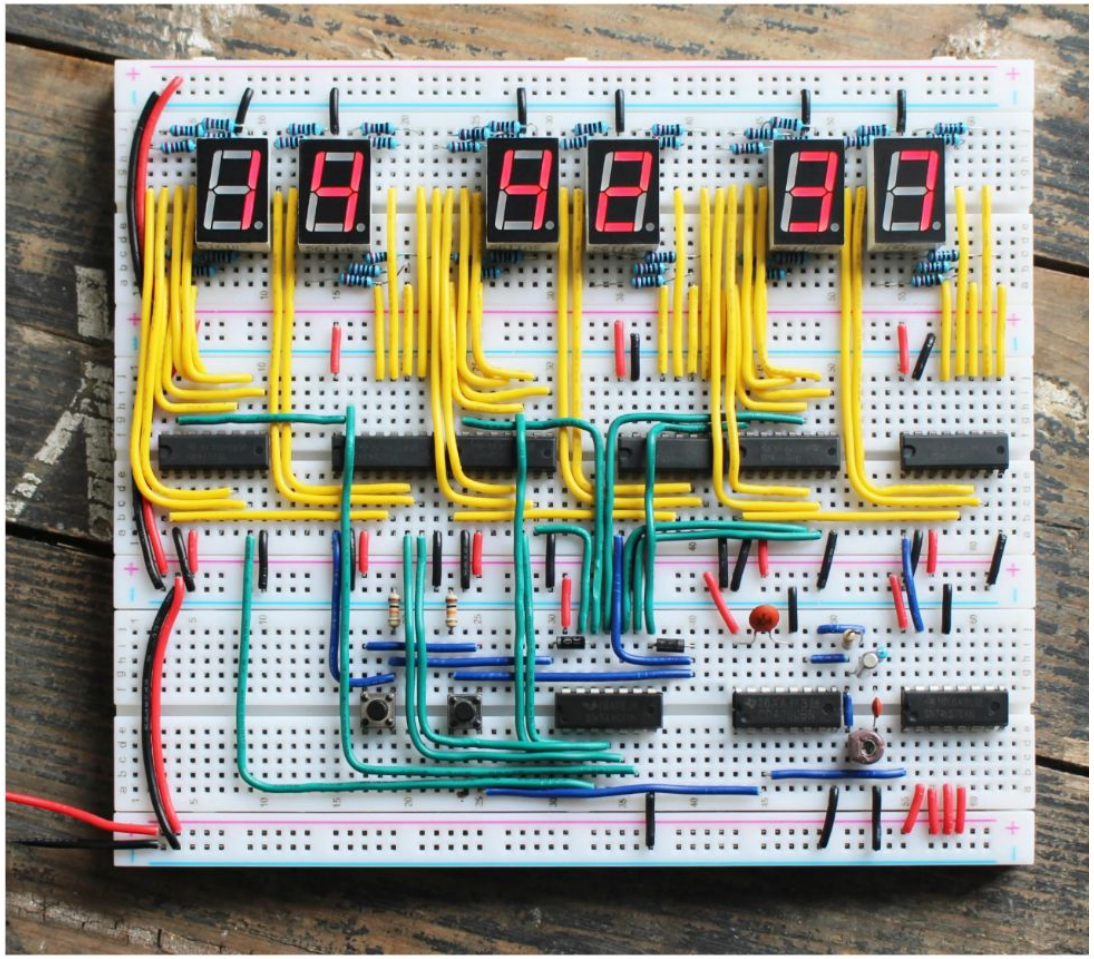

Reliable breadboard connections

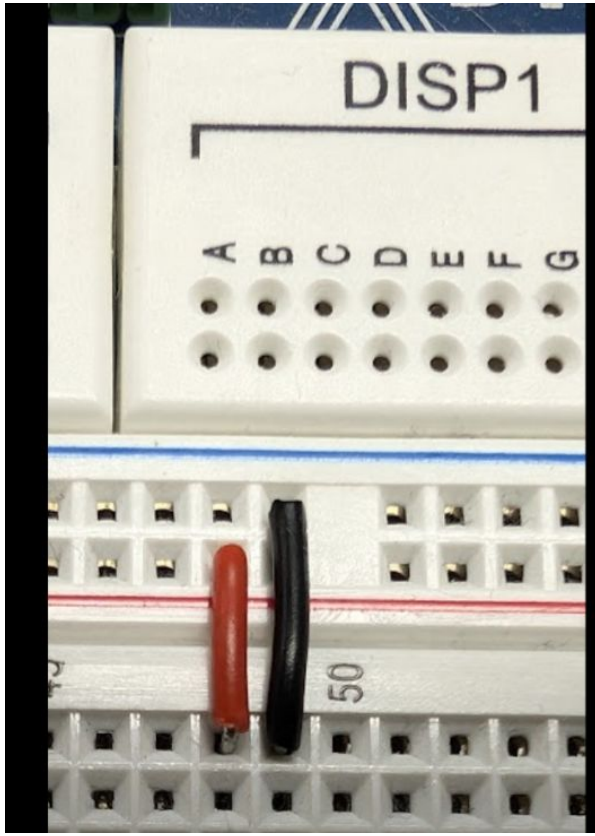

Breadboard wires should sit on the board with minimal excess insulation or conductor exposed. Avoid using rainbow-colored wires, and be cautious with wire ends that are too long, as they might inadvertently connect to other points underneath the rows.

Materials for the physical build

Circuit	Breadboard, LED, and 330 Ω resistor.
Wiring	22 AWG solid-core wire and wire strippers or cutters.
Power	Bench supply and leads. Use 4.5 V.

Build and make changes with the supply output off.

The 4.5 V breadboard circuit

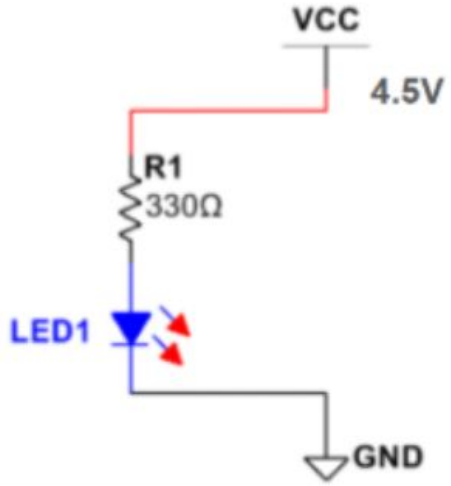

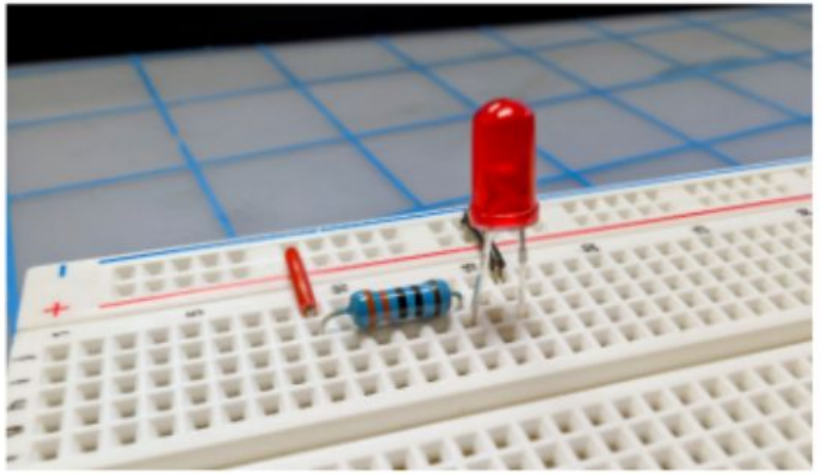

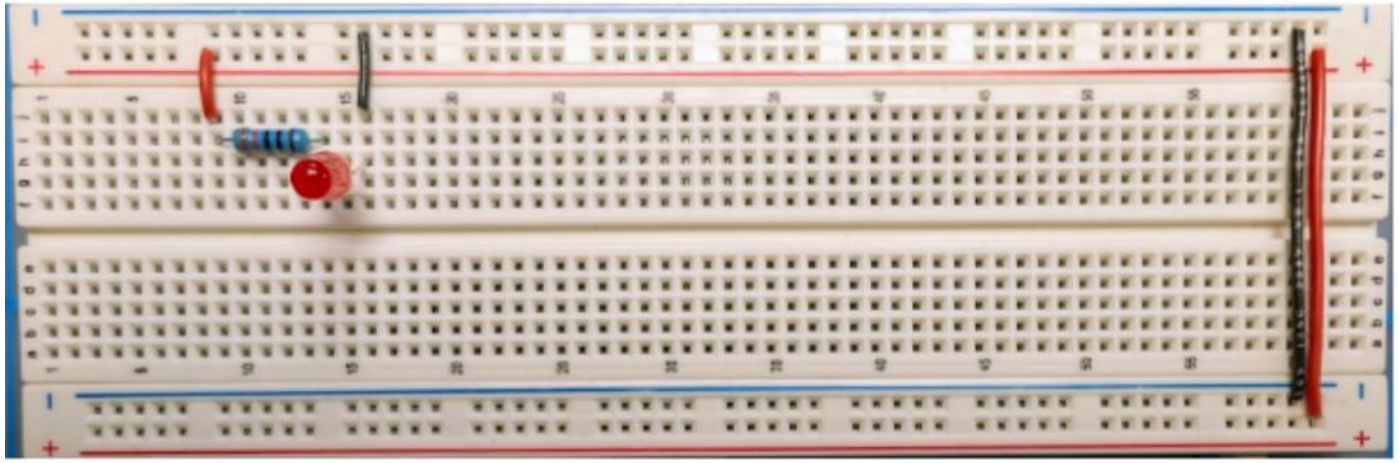

An example with a push button

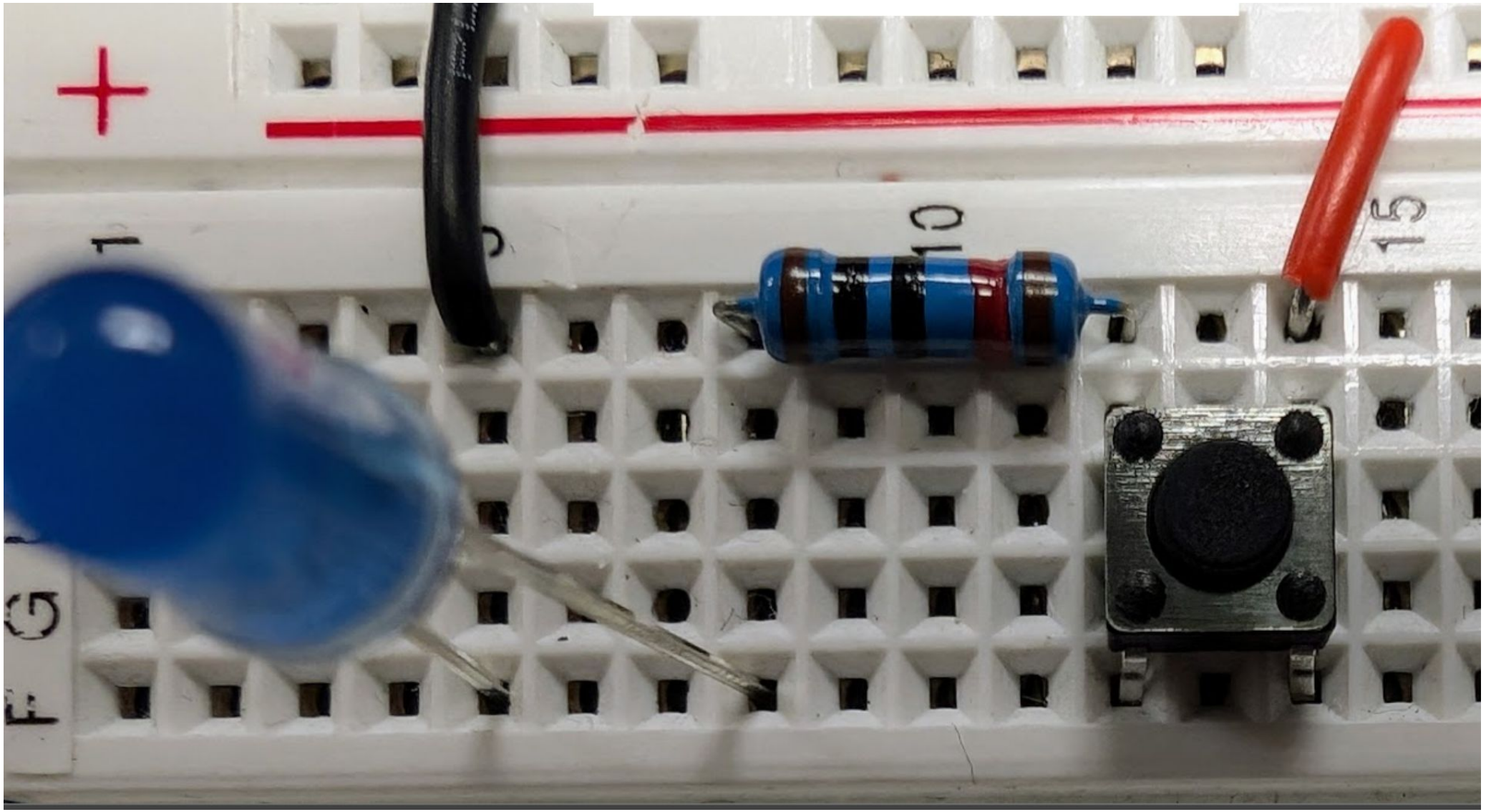

Prototype photos

Photo 1	Show a jumper you cut and stripped yourself.
Photos 2–4	Show the powered circuit from the top, side, and an isometric angle.

Make the lit LED, resistor, jumpers, and power connections visible.

What changed on real hardware?

Wire preparation	Explain how you made a reliable electrical connection.
A real challenge	Describe one challenge that appeared when you moved from simulation to the physical circuit.
Your reasoning	Explain what you checked, changed, or tested to get the circuit working.

Physical build vocabulary

Wire preparation	Conductor, insulation, solid-core wire
Checking connections	Electrical contact, continuity, short circuit
The build	Power supply, prototype

Final evidence

Submit one Google Slides presentation through the Canvas assignment.

Show what you did	Use your photos, screenshots, and diagrams as evidence.
Explain what you found	Describe why the circuit works and how you diagnosed a problem.
Use the vocabulary	Make the first use of each required term bold and underlined.

Evidence for circuit reasoning

10 points	Identify all nine resistors with the correct resistance units.
20 points	Classify circuits A–F, defend each decision, and describe the fixes.

Evidence for Tinkercad

10 points	Include both account setup screenshots with captions.
20 points	Include the deliberately broken circuit and the restored, running circuit. Explain the faults and trace the restored path.

Evidence for the physical build

15 points	Show the jumpers before and after installation. Explain how you sized and checked the connections.
20 points	Include a wire-prep photo and three working prototype views. Explain what you learned from the physical build.

Before you submit

5 points	Keep the presentation readable, in module order, and in your own words.
Check completeness	Review the Canvas checklist and confirm that every required image and explanation is included.
Submit	Paste the completed Google Slides link into the Canvas assignment.