Semiconductor Foundations

Through Diodes and Transistors

Jordan Kivitz · April 2026

Curriculum Overview & Design Approach

This curriculum is designed to help students solve difficult technical problems in teams. To cultivate these habits, the unit is grounded in constructivist learning principles. Durable understanding develops when students actively build, test, and revise their ideas rather than receiving explanations fully formed. The goal is not simply for students to learn what a diode does. The goal is for students to understand how engineered semiconductor materials can control current inside modern electronic systems. In the spirit of Mehta and Fine (2019), the unit prioritizes deeper learning over coverage by asking students to work at the edge of their current understanding on technical problems worth solving.

> **Cognitive Disequilibrium:** Deeper learning often begins when a student's current understanding cannot explain what they are experiencing. When students flip a diode and the circuit stops working, that disruption creates a meaningful need to explain the behavior of the system. With support, scaffolding, and a reason to persist, students can stay in that uncertainty long enough to build a more accurate model rather than retreat into memorized rules. (Fosnot, 1996)

> **Language Follows Logic:** Students first observe patterns, collect evidence, and form initial explanations. Formal vocabulary comes later, when it helps students name and refine ideas they have already begun to build. Terms such as P-N junction, forward bias, reverse bias, and voltage drop become tools for explaining measured behavior rather than isolated definitions to memorize. This supports deeper learning by connecting technical language to meaningful work. (Mehta & Fine, 2019)

To organize this approach, the unit relies on two instructional frameworks:

> **Understanding by Design (UbD):** The unit is designed with the end in mind. Each simulation, measurement, physical build, content decision, and documentation requirement supports the enduring understandings and performance goals of the unit. (Wiggins & McTighe, 1998)

> **5E Learning Sequence:** The 5E model — Engage, Explore, Explain, Elaborate, Evaluate — puts constructivist learning into a practical classroom rhythm. Students first investigate circuit behavior through hands-on exploration. They then use their evidence to build a conceptual explanation, refine that explanation through documentation, and evaluate their work through peer review. (Bybee et al., 2006)

Together, these frameworks keep the unit focused on technical reasoning rather than coverage. Students do not simply assemble a circuit and memorize vocabulary. They build, measure, question, explain, revise, and defend their understanding.

Unit Structure

This unit is organized into two phases:

- Phase 1: Diode and P-N Junction Foundations
- Phase 2: Bipolar Junction Transistor Foundations

Connection to Semiconductor and Advanced Manufacturing Careers

1. How This is a TCHIP Lesson (Pedagogy)

- **Deeper Learning Over Coverage:** We are moving away from having students just assemble circuits and memorize facts.
- **Cognitive Disequilibrium:** We intentionally use surprising circuit behavior—like a circuit stopping when a diode is flipped—to create a meaningful need for students to explain the system.
- **Building Endurance:** We provide the scaffolding students need to sit in uncertainty and stick with problems longer, rather than retreating to memorized rules.
- **Language Follows Logic:** Students build, measure, and observe patterns first. Formal vocabulary is introduced later so it acts as a tool to explain their evidence, not just a definition to memorize.

---

2. How It Meets Core Science Needs (Physics & Materials)

- **Structure Dictates Function:** Students must connect the atomic structure of materials to the visible behavior of electric charge in a circuit.
- **The Semiconductor Model:** We move beyond the simplified "one-way valve" idea. Students learn how engineered P-type and N-type materials form a P-N junction.
- **Evidence-Based Physics:** Students use macroscopic tools—multimeters measuring voltage and current—to test and prove microscopic theories about forward and reverse bias.

---

3. How It Meets Industry Needs (Advanced Manufacturing)

- **Developing Technical Judgment:** Industry readiness is about more than assembling parts; it requires diagnostic troubleshooting when systems fail.
- **High-Reliability Habits:** We are training the exact habits needed in advanced manufacturing: building carefully, measuring accurately, and explaining decisions with evidence.

- **Professional Documentation:** Students learn that technical work is not complete until it is visible and traceable. They must document their process clearly enough that another team can verify what was built, how it behaved, and why.

Phase 1: Diode and P-N Junction Foundations

UbD Stage 1 — Desired Results

Transfer Goals

Students will be able to independently:

- Predict, test, and explain how electric charge behaves in simple circuits by connecting circuit behavior to the structure of materials and components.
- Use schematics, datasheets, multimeters, and troubleshooting evidence to diagnose why a circuit is or is not working as intended.
- Document technical work clearly and precisely so another person can understand what was built, how it behaved, what was changed, and why.

Enduring Content Understandings

To become ready for Phase 2, students should leave Phase 1 understanding that:

- **The atomic structure of a material affects how electric charge moves through it.**
  - Materials do not behave the same way in a circuit: copper wire allows electrons to move easily (conductor), while plastic insulation resists that movement (insulator). Semiconductors have a structure that allows controllable conductivity, which enables the switching and amplification at the heart of modern electronic devices.
- **Semiconductors are useful because their electrical behavior can be engineered.**
  - Silicon matters in electronics because engineers can change how it behaves by adding small amounts of other elements. This process allows silicon to become the basis for diodes, transistors, LEDs, sensors, memory, CPUs, GPUs, and other integrated circuits.
- **A diode is the simplest semiconductor device.**
  - A diode is not just another component placed in a circuit path. It is a device built from a P-type region and an N-type region joined together. Its internal structure allows current to travel in one direction like a one-way pipe valve.
- **Diodes are useful because they control current direction.**

    - Students should connect the diode's one-way behavior to real-world applications. A diode can prevent reverse-polarity damage when charging batteries, steering current to represent digital 1s and 0s, protecting components like motors, and demonstrating why polarity is critical in all electronic systems.

Enduring Performance Standards

Students must understand that technical mastery involves more than assembling parts. We must:

- **Pursue mastery of diagnostic troubleshooting.**
    - Schematics, datasheets, and multimeters are universal tools for observing the seemingly invisible patterns of a circuit. Students must use these tools to gather evidence, test predictions, and revise technical performance when a system behaves unexpectedly.
- **Document work with clarity and precision.**
    - Technical work must be visible, traceable, and understandable to others. Students are expected to document their process through screenshots, measurements, labels, videos, diagrams, and written commentary that explain what was built, how it was tested, repaired, and improved, and why it matters.
- **Cultivate technical endurance.**
    - Troubleshooting is not a sign of failure; it is the core of innovation. Those who stick with difficult problems longer have historically made the biggest leaps in advancing human understanding and technology.

Essential Questions

- Why do materials behave differently in a circuit?
- What makes a semiconductor different from a conductor or insulator?
- How can the internal structure of a component determine what it does in a system?
- Why does diode orientation matter?
- How do engineers make invisible electrical behavior visible enough to test and explain?
- When a circuit does not behave as expected, how do we determine what is actually happening?

UbD Stage 2 — Acceptable Evidence

Task Description

Teams of 2–3 students investigate how introducing a standard silicon P–N junction diode alters the behavior of a baseline "Hello World!" LED circuit. By systematically comparing forward and reverse bias orientations, students

measure voltage and current, record physical and numerical observations, and predict subsequent outcomes to uncover the underlying mechanics of one-way conduction. (See Lesson 1)

Evidence of Understanding

Students demonstrate conceptual mastery through technical documentation rather than a traditional exam. Using precise vocabulary (*circuit*, *voltage*, *current*, *diode*, *orientation*, *semiconductor*, *P-N junction*, ...) and structured sentence stems, teams synthesize their learning into digital documentation. An accompanying individual appendix slide requires each student to articulate how their empirical observations logically support the theoretical model of a diode as a one-way semiconductor device. (All Lessons)

Evaluation and Peer Review

Assessment is driven by a shared, objective peer-review framework. Students evaluate peer documentation against clear criteria found within the checklist link below. The final performance grade averages three independent reviews from separate teams, directly engaging students in the application of evaluative criteria and the critical analysis of technical work. (See Lesson 3)

UbD Stage 3 — Learning Plan

Three-Lesson 5E Sequence: From Circuit Behavior to Semiconductor Explanation

This three-lesson sequence moves students through a cycle of building, measuring, predicting, explaining, revising, and defending. Students do not begin by memorizing how a diode works. They begin by creating evidence from a circuit that behaves in a surprising way, then use that evidence to build a stronger explanation.

Lesson 1 — Engage + Explore

Students build a working baseline LED circuit, document that it works, and record voltage and current readings. They then add a diode, test it in one orientation, flip it, and test it again. Each time, they capture what changed: whether the LED turned on, how the current changed, where voltage appeared in the circuit, and how the diode was oriented.

By the end of the lesson, students have not been handed the explanation yet. Instead, they have created the evidence they will need: labeled circuit images, measured data, and an initial prediction about what the diode is doing.

Lesson 2 — Explain

Students return to their Lesson 1 evidence and compare it to the class's original predictions. They sort those predictions by asking whether each one is supported by measurements, partly right but incomplete, or not grounded in evidence.

Once students see that “the diode only lets electricity go one way” describes the pattern but does not fully explain it, they examine diagrams of doped silicon, P-type material, N-type material, and the P-N junction. They use those visuals to build a better model of what happens inside the diode.

By the end of the lesson, students revise their original prediction into a stronger technical explanation: flipping the diode changes the circuit because the internal P-N junction responds differently under forward bias and reverse bias.

Lesson 3 — Elaborate + Evaluate

Students turn their investigation into technical documentation that another team can understand and verify. They refine their screenshots, labels, measurements, diagrams, and written explanations so the documentation clearly shows what was built, what changed, what the evidence showed, and why the final explanation makes sense.

During peer review, students evaluate another team’s work against a shared checklist. They look for missing evidence, unclear claims, weak labels, inaccurate vocabulary, and explanations that do not yet connect the measurements to the P-N junction model. Between review rounds, teams revise their own documentation.

By the end of the lesson, students understand that technical work is not complete when the circuit works. It is complete when the evidence and explanation are clear enough for someone else to trust.

Phase 1, Lesson 1 — Engage + Explore (Overview)

Lesson 1 Title

What Changed in the Circuit?

Established Goals

Students develop an empirical understanding of how adding a diode changes circuit behavior.

Understandings

Students will understand that:

- A diode changes how current flows in a circuit depending on its orientation.
- Current flows in only one direction through a standard silicon diode (forward bias vs. reverse bias).
- Voltage in a series circuit is distributed across components when current flows, but behaves differently when current is blocked.
- Observable circuit behavior (light, voltage, current) reveals underlying structure that must be explained.

Essential Questions

- What changes when a diode is added to a circuit?
- Does the direction of a component matter in circuit design?
- How can measurements help us explain what we cannot see?

Evidence of Learning in Lesson 1

- Students capture screenshots from simulations and photos from physical builds, inserting them into team documentation slides with labels that show circuit state and diode orientation.
- Students measure and record voltage across specified components (source, diode, LED, resistor) for each diode orientation, embedding those readings directly in their documentation.
- Students write brief, evidence-based predictions in their slides about what the diode is doing in the circuit to cause the observed and measured outcomes.
- Students submit their predictions via a Google Form; the teacher then analyzes these responses with an AI model to surface representative ideas that will be used to launch Lesson 2.

Knowledge Transfer

Students will know

- Basic breadboard structure and series circuit construction.
- How to measure voltage and current using a multimeter.
- **Key vocabulary:** circuit, voltage, current, LED, resistor, diode, orientation, evidence, pattern, voltage drop.

Students will be able to

- Build and verify a baseline LED circuit.
- Integrate a diode into a circuit and test multiple orientations.
- Measure voltage across components and interpret readings.
- Document and communicate findings using precise technical language and visual evidence.
- Identify patterns in empirical data and form evidence-based predictions.

Reference Builds and Schematics

Baseline LED circuit (current flowing, no added diode):

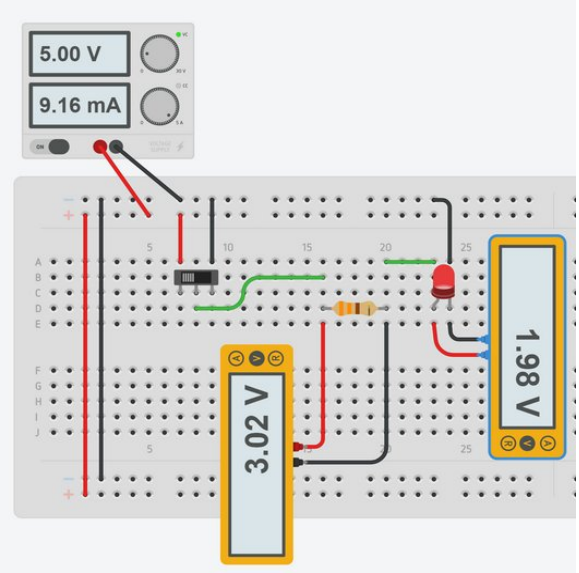

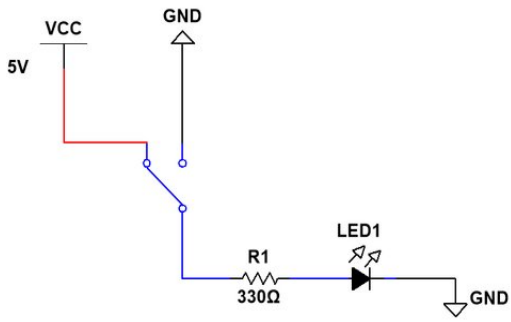

Forward-biased added diode (gray band toward ground): the LED stays on, but voltage and current shift.

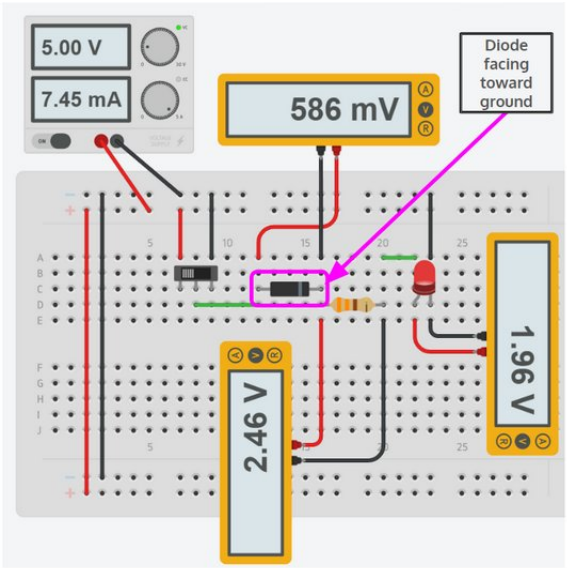

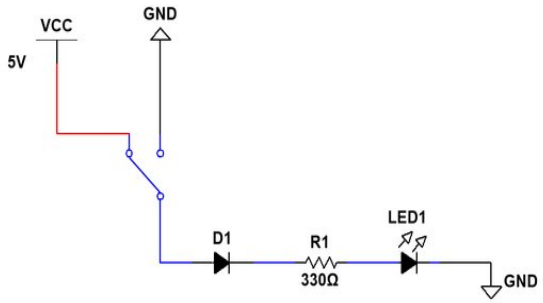

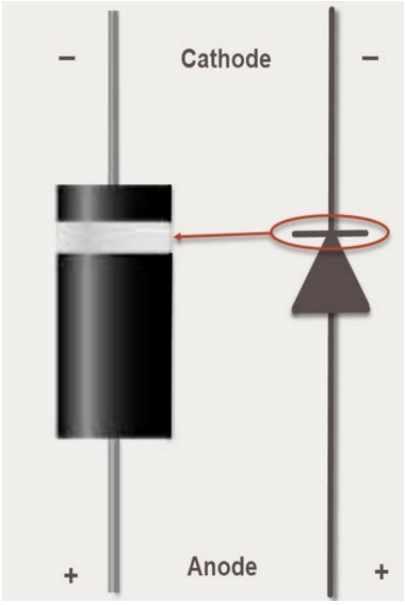

Reverse-biased added diode (gray band toward power source): nearly the full source voltage drops across the diode and current is blocked.

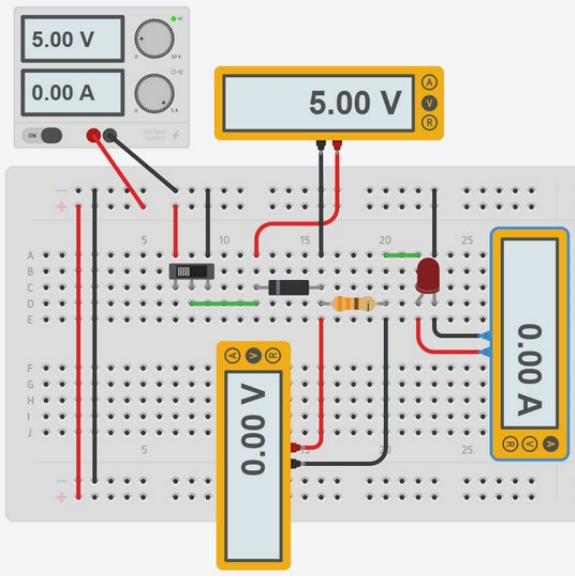

Lesson 1 Evidence Table

Circuit State	Source Voltage	Diode Voltage	LED Voltage	Resistor Voltage	Total Current	LED Behavior
Baseline LED circuit	5.00 V	—	1.98 V	3.02 V	9.16 mA	On
Gray band toward ground	5.00 V	0.586 V	1.96 V	2.46 V	7.45 mA	On
Gray band toward power source	5.00 V	5.00 V	0.00 V	0.00 V	0.00 A	Off

---

Phase 1, Lesson 2 — Explain (Full Lesson)

Lesson Title

What Explains the Pattern?

Summary

In Lesson 2, students use the evidence and predictions from Lesson 1 to explain why diode orientation changes circuit behavior. They learn that a standard silicon diode is an engineered semiconductor device with a P-N junction formed by P-type and N-type material. When the diode is forward biased, current can flow once enough voltage is applied; when it is reverse biased, the diode blocks most current under normal circuit conditions. Students connect their LED observations, voltage readings, current readings, and diode orientation to a conceptual model of how semiconductor structure controls electrical behavior.

Lesson Length

- One 70–90 minute class period
- This lesson can also be split into two shorter lessons:
  - Part 1: Prediction sorting and P-N junction model
  - Part 2: Evidence-based revision and documentation

Required Prior Student Knowledge

Students should already be able to:

- Build a basic LED circuit with a resistor.
- Identify the positive and negative sides of a power source.
- Recognize that LEDs and diodes have polarity.
- Use a multimeter or simulation tools to measure voltage across components.
- Explain that current flows only when there is a complete circuit path.
- Use screenshots, photos, measurements, and observations as evidence.
- Locate their Lesson 1 evidence table and original prediction.

Students do not need to already understand P-type material, N-type material, depletion regions, or forward/reverse bias. Those ideas are introduced in this lesson after students have a reason to need them.

Desired Results

Students will understand that:

- A diode is not simply a component with a “right direction.”
- A standard silicon diode is an engineered semiconductor device.
- Inside the diode, P-type and N-type semiconductor materials meet to form a P-N junction.
- The diode’s behavior changes depending on the electrical condition across that junction.
- When the diode is forward biased, the junction allows significant current to flow once enough voltage is applied.
- When the diode is reverse biased, the junction blocks most current under normal classroom circuit conditions.
- Voltage and current measurements help engineers explain behavior that cannot be seen directly.

Essential Questions

- Why does flipping a diode change the behavior of the whole circuit?
- What is happening inside the diode that we cannot directly see?
- How is bias different from simple orientation?
- How do measurements help engineers explain hidden electrical behavior?

Evidence of Understanding

Students show understanding when they can:

- Use Lesson 1 data to identify which diode orientation was forward biased and which was reverse biased.
- Explain why the LED turned on in one orientation and stayed off in the other.
- Connect voltage and current measurements to diode behavior.
- Label a simple diode model with P-type material, N-type material, P-N junction, anode, and cathode.
- Revise their original prediction using accurate vocabulary.
- Explain why “the diode only lets electricity go one way” is partly right but incomplete.

Core Technical Explanation

A diode’s orientation matters because orientation affects the **bias condition** across the diode.

- **Orientation** means how the diode is physically placed in the circuit.
- **Bias** means the electrical condition across the diode.

A standard silicon diode has two regions:

- **P-type material**, which has "holes," or places where electrons can move.
- **N-type material**, which has free mobile electrons.

Where these two regions meet, they form a **P-N junction**. Near that junction, electrons and holes combine, creating a **depletion region**. This region acts like a barrier.
In **forward bias**, the applied voltage reduces the barrier enough for significant current to flow.
In **reverse bias**, the applied voltage strengthens the barrier, so the diode blocks most current under normal classroom circuit conditions.
For this unit, students do not need a microscopic physics explanation. They need a usable model:

> *A diode behaves differently when flipped because its engineered P-N junction responds differently to forward bias and reverse bias.*

Transferable Knowledge

- Students move from "the diode behaves differently when flipped" to deeper understanding with "the diode behaves differently because its engineered P-N junction responds differently to forward bias and reverse bias."

- Students will know that a diode's behavior comes from its internal semiconductor structure, not from a simple one-way rule. They will be able to distinguish between forward bias and reverse bias, use Lesson 1 data to support a technical explanation, revise an initial prediction based on new information, and connect observable circuit behavior to a hidden semiconductor model.

- This prepares students for later work with transistors, logic circuits, timers, motor drivers, and robotics, where semiconductor devices are used to control larger systems.

Lesson 2 — Lesson Flow

1. Open Documentation + Display Prediction Patterns

Approx. 5 minutes

As students enter, they open their Lesson 1 documentation and find:

- Their completed evidence table
- Their screenshots and photos of each circuit condition
- Their original predictions from Lesson 1

While students are finding their work, the teacher displays a spread of anonymous predictions from the Google Form. These predictions should show the range of student thinking, not just the best answers.

Possible examples:

- "The diode only lets electricity go one way."
- "The diode blocks current when it is flipped."
- "The LED turns off because the voltage cannot get through."
- "The diode protects the LED."
- "The circuit is open when the diode is backward."

- “The diode has polarity like an LED.”
- “Something inside the diode must change how current moves.”
- “When the diode is backward it blocks the electricity and the battery can’t push it through.”
- “The diode lets energy go forward but not backward, so the energy can’t come back to the battery.”
- “The diode has a mood ring inside it, and when you connect it backward it gets offended and refuses to work.”
- “When the diode is backward, all the electrons get scared and hide in the battery so nothing moves.”
- “If you reverse the diode, the current has to go uphill and it’s too lazy, so it just takes a nap.”
- “The diode converts electricity into vibes when it’s backward, and sadly LEDs don’t run on vibes.”

Teacher Opening

> *Last class, you built the evidence and made predictions. Today, we are going to test those predictions. Some will be supported by evidence. Some will be partly right but incomplete. Some will need revision. Our goal is not just to find the “right answer.” Our goal is to build a better explanation.*

Opening Question

> *Which predictions seem closest to what your evidence showed, and which predictions still fail to explain why the circuit behaved that way?*

2. Build Criteria for Strong Explanations

Approx. 10 minutes

Before students sort predictions, the class defines what makes an explanation strong.

Teacher Prompt

> *“What makes a strong technical explanation?”*

Students should generate ideas such as:

- It matches what happened.
- It uses evidence.
- It includes measurements, not just observations.
- It explains current flow, not just whether the LED turned on.
- It connects cause and effect.
- It uses accurate vocabulary.
- It helps predict what would happen in another circuit.

Prediction Sorting Criteria

Supported by Evidence — A prediction is supported by evidence if it matches what students observed and measured. It should connect to evidence such as:

- The LED turned on or stayed off.
- Current flowed or did not flow.
- Voltage readings changed.
- The diode orientation changed.

- The rest of the circuit stayed the same.

Needs a Why — A prediction is partly right but incomplete if it matches the pattern but does not fully explain the cause.
For example:

> *"The diode only lets electricity go one way."* This matches the evidence, but it does not explain *why* the diode behaves that way.

Not Supported by Evidence — A prediction needs revision if it conflicts with evidence, uses incorrect language, or makes a claim that the data does not support.
For example:

> *"The diode reads your mind and only lets current flow if you believe hard enough in the correct orientation."*

3. Test Predictions Against Evidence

Approx. 15 minutes
Students work in pairs or teams to test the displayed predictions against their Lesson 1 evidence table. They are not sorting based on whether the prediction "sounds right." They are using an evidence test.
Evidence Test Questions
For each prediction, students ask:

1. Does this match what we observed?
2. Does this match what we measured?
3. Does it explain current flow, or only LED behavior?
4. Does it explain why flipping the diode mattered?
5. Does it leave an important question unanswered?
6. Is the language technically accurate?

Students then place each prediction into one of the three categories within a sorted table:

- Supported by Evidence
- Needs a Why
- Not Supported by Evidence

Student Task
Students choose at least 8 predictions from the displayed list and justify each placement. They should be able to say:

> *We placed this prediction in this category because our evidence showed…*

This does not need to be a long written response. The point is for students to defend their reasoning using the evidence and predictions they already found.

Teacher Circulation Questions

- What evidence supports that category?
- Does this prediction describe what happened or explain why it happened?
- Does it mention current, voltage, or only the LED?
- Is there a claim here that your data does not actually prove?
- What does this prediction still fail to explain?

Sample Outcome Sorting Table

Category	Prediction	Evidence-Based Reasoning
Supported by Evidence	*"The diode has polarity like an LED."*	The circuit behaved differently when the diode was flipped. In one orientation, the LED turned on; in the opposite orientation, the LED stayed off or had very little current.
Supported by Evidence	*"Something inside the diode must change how current moves."*	The battery, resistor, LED, and wires stayed the same, but changing only the diode orientation changed the circuit behavior. That supports the idea that the diode's internal structure affects current flow.
Needs a Why	*"The diode only lets electricity go one way."*	The circuit evidence supports directional behavior: current flowed in one orientation and not the other. However, this does not fully explain why the diode behaves this way under forward bias and reverse bias.
Needs a Why	*"The diode blocks current when it is flipped."*	The LED turning off and the current reading dropping supports this idea under normal circuit conditions. However, "blocks current" is simplified because real diodes can still have tiny leakage current and can break down at high reverse voltage.
Needs a Why	*"The LED turns off because the voltage cannot get through."*	The LED staying off is supported by the circuit observation, but the explanation is not precise. Voltage is not a substance that "gets through." The better explanation is that the diode was not forward biased, so there was not enough current through the LED.
Needs a Why	*"The diode protects the LED."*	The statement might sound reasonable, but the evidence from this circuit only shows that the diode changed whether current flowed. The measurements do not prove that the diode's purpose was to protect the LED.
Needs a Why	*"The circuit is open when the diode is backward."*	The LED staying off and the current dropping make the circuit seem open. However, the diode is not literally a broken wire or open switch; it acts more like a very high resistance under reverse bias.
Needs a Why	*"When the diode is backward it blocks the electricity and the battery can't push it through."*	The evidence supports the visible effect: the LED stayed off and current was very low. However, this explains what happened more than why it happened inside the diode.
Needs a Why	*"The diode lets energy go forward but not backward, so the energy can't come back to the battery."*	This tries to explain the pattern, but it does not use strong circuit evidence or accurate vocabulary. The evidence is about current, voltage, diode orientation, and LED behavior—not energy "coming back" to the battery.
Not Supported by Evidence	*"The diode has a mood ring inside it, and when you connect it backward it gets offended and refuses to work."*	This is not grounded in circuit evidence. It does not use observations, voltage readings, current readings, or accurate vocabulary.
Not Supported by Evidence	*"When the diode is backward, all the electrons get scared and hide in the battery so nothing moves."*	This is not supported by the evidence. The measurements may show very low current, but they do not show electrons "getting scared" or hiding.
Not Supported by Evidence	*"If you reverse the diode, the current has to go uphill and it's too lazy, so it just takes a nap."*	This is a metaphor, not an evidence-based explanation. It does not connect to diode orientation, forward bias, reverse bias, voltage drop, or current measurement.
Not Supported by Evidence	*"The diode converts electricity into vibes when it's backward, and sadly*	This is not grounded in reality or circuit data. It does not explain the LED behavior using measured voltage, current, or semiconductor structure.

Category	Prediction	Evidence-Based Reasoning
	LEDs don't run on vibes."	

4. Class Debrief: What Our Predictions Can and Cannot Explain

Bring the class back together. Ask several teams to share the predictions they placed in each category. As students share, build this idea:

Teacher Prompt

> *"Our evidence clearly shows that the diode behaves differently when flipped. But most of our predictions still do not fully explain what inside the diode causes that behavior."*

5. The Bridge: Validating the Pattern with a Mechanical Analogy

Once students realize their best explanations are still "Incomplete," the teacher validates their empirical observations using a familiar mechanical system.

Teacher Prompt

> *"Your evidence showed a distinct pattern. The circuit behaves somewhat like a mechanical check valve in a pipe. Water can push the flap open one way, but gets slammed shut the other way. It's a great analogy for the pattern we see in the 'Partly Right' column. But here is the problem: a standard silicon diode does not have a tiny mechanical flap inside it. It is a solid piece of material. So, what is actually doing the blocking?"*

> *The check valve explains the pattern, but not the mechanism.*

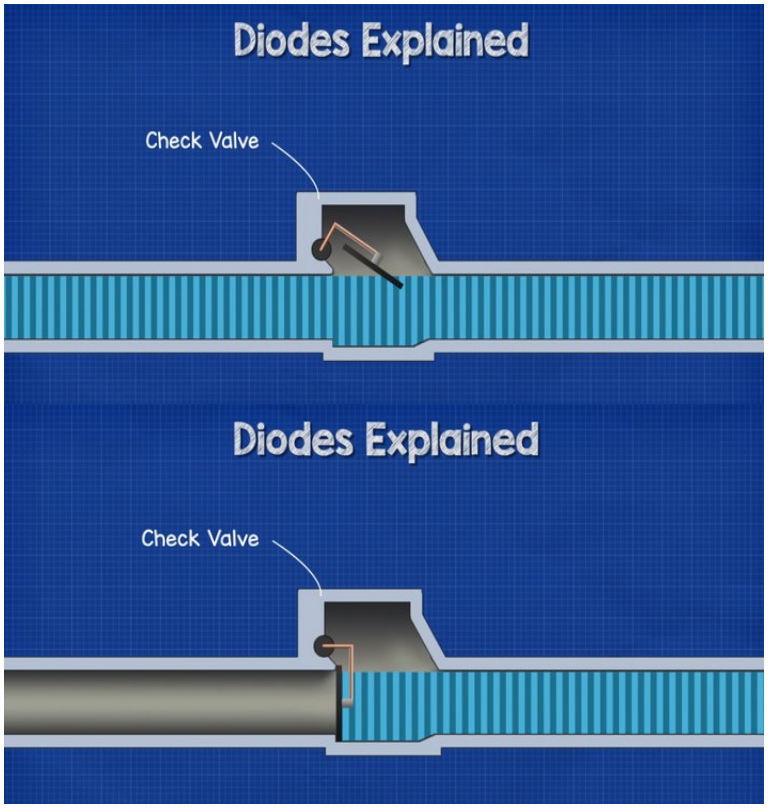

A mechanical check valve mirrors the directional pattern. But a silicon diode is solid—what does the blocking?

6. Visual Decoding Challenge

Students transition from evaluating past predictions to constructing new knowledge. The teacher provides teams with diagrams (some examples below) within their assignment in Canvas for them to access.

Teacher Instructions

> *"We are not going to look up the answer. You have 5 minutes with your team. Look closely at these diagrams. Based purely on the visual evidence in front of you, write a theory in your documentation explaining what could be happening at the exact line where the p-type and n-type region meets (the P-N Junction)."*

Student Task

Students write within their documentation:

- **What they think is happening at the P-N junction.**
- **How that might explain the circuit behavior from Lesson 1.**

Teacher Circulation

Instead of lecturing, the teacher circulates and asks teams to defend their visual interpretations:

- What is different about the P-type side and the N-type side?
- Where do you see holes?
- Where do you see extra electrons?
- What might happen where holes and electrons meet?
- How could that middle region affect current flow?
- How does this connect back to the black diode you placed in the circuit?

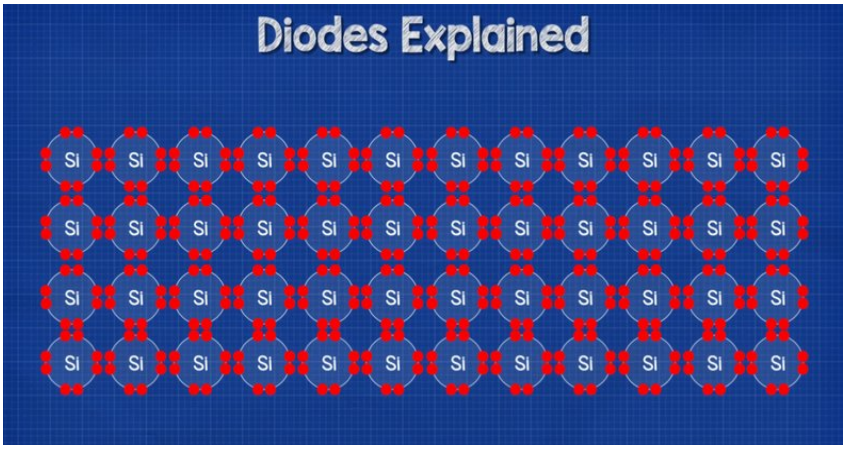

Pure silicon: tightly bonded lattice with almost no free electrons.

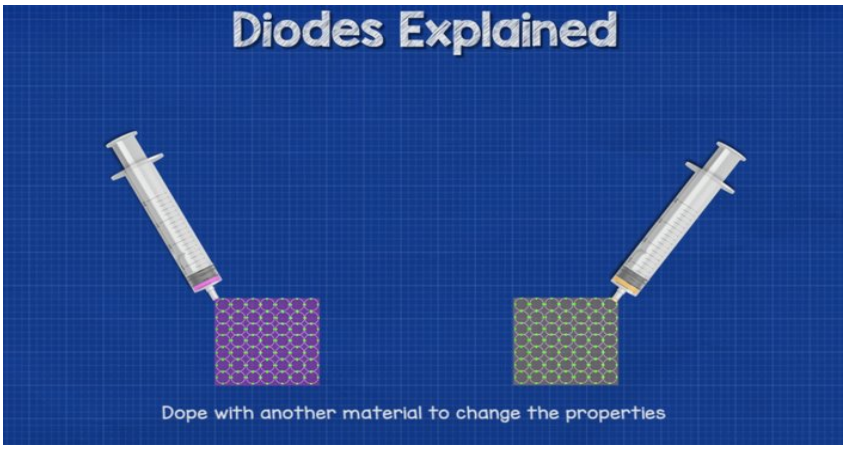

Doping silicon with other elements changes its electrical properties.

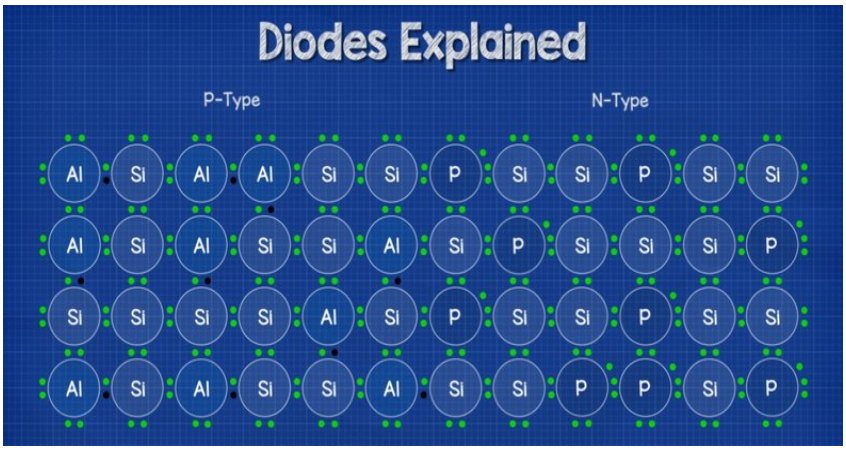

P-Type (Aluminum doped) and N-Type (Phosphorus doped) regions at the atomic level.

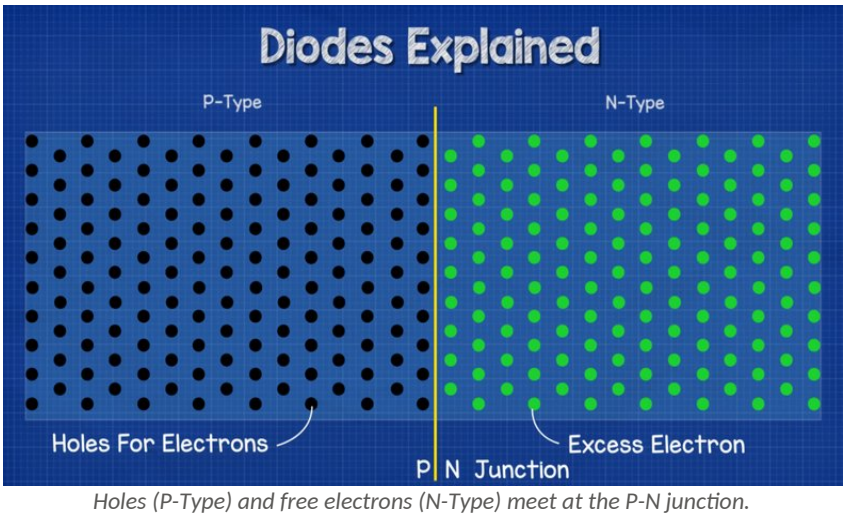

Holes (P-Type) and free electrons (N-Type) meet at the P-N junction.

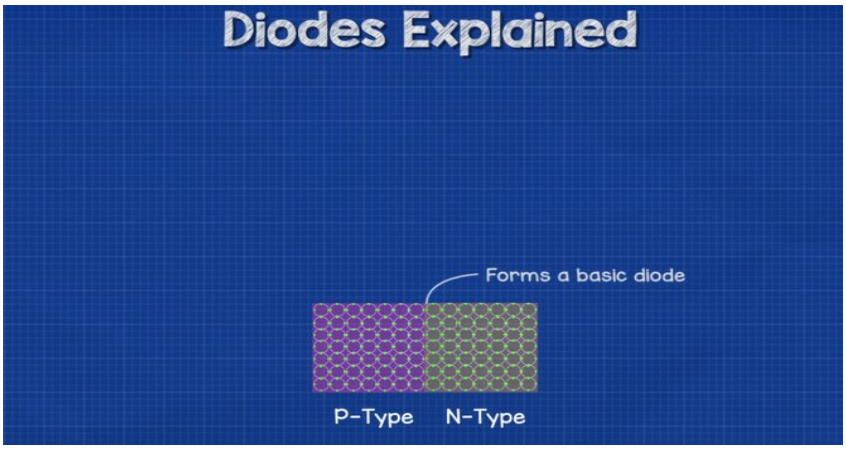

A basic diode: a P-Type region joined to an N-Type region.

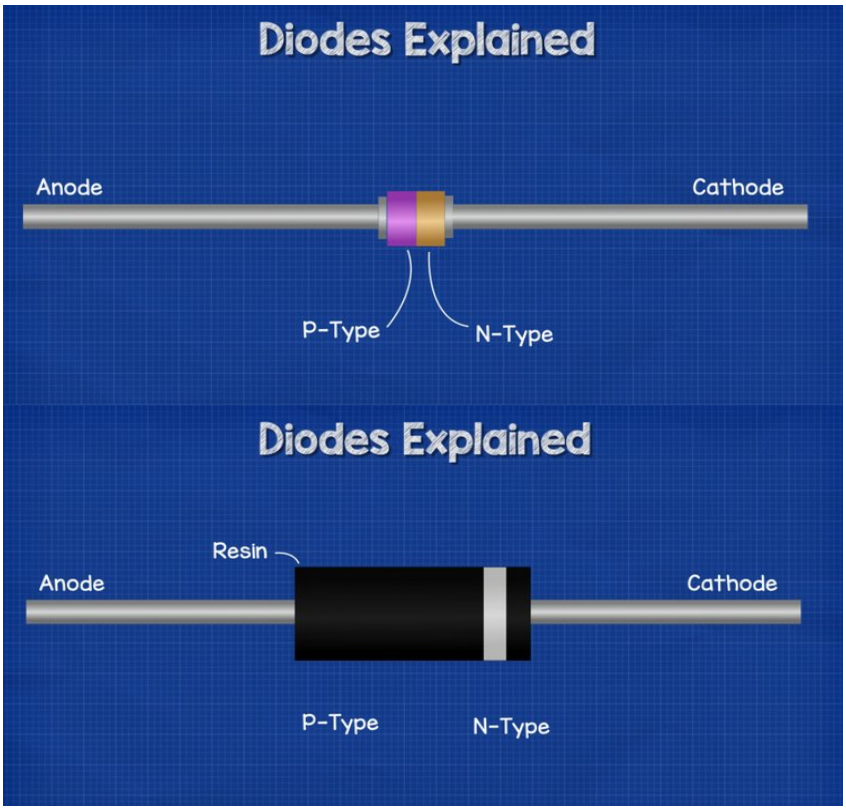

Mapping the physical diode (black resin, cathode stripe) to its internal P-Type and N-Type regions.
Visuals adapted from The Engineering Mindset – Basics of Diodes.

7. Build the P-N Junction Explanation Together

After teams develop their first visual theory from the diagrams, bring the class back together. The goal is to use the diagrams as shared evidence to explain what the circuit data could not fully explain on its own.

Teacher Framing

> *"Your Lesson 1 evidence showed that the diode allowed current in one orientation and blocked most current in the other. Your predictions described that pattern, but they did not fully explain why it happened. Now we are going to use the diagrams to build the missing explanation."*

Class Review Prompts
Project the diagrams one at a time and guide students through them with questions like:

- What changes when silicon is doped?
- What is different about P-type and N-type material?
- Where are the holes?
- Where are the extra electrons?
- What happens where the two regions meet?
- Why might that junction behave differently depending on how the diode is connected?
- How does the stripe on the physical diode help us identify one side of the device?

Teacher Explanation to Build With Students
As students respond, help the class build toward this explanation:

> *"A standard silicon diode is made from two engineered semiconductor regions: P-type material and N-type material. Where those materials meet, they form a P-N junction. Near the junction, electrons and holes combine, creating a depletion region. This region acts like a valve.*
>
> *When the diode is forward biased, the applied voltage reduces the barrier enough for significant current to flow. When the diode is reverse biased, the applied voltage strengthens the barrier, so the diode blocks most current under normal classroom circuit conditions."*

Connect Back to Lesson 1 Evidence
Return briefly to the evidence table. Ask:

- "Which orientation allowed current to flow?"
- "Which orientation blocked the most current?"
- "What voltage and current readings prove that?"
- "Why is 'the diode only lets electricity go one way' partly right, but still incomplete?"

Target Conclusion

> *"The diode behaved differently when flipped because its internal P-N junction responded to the direction of the applied voltage. In forward bias, current flowed and the LED turned on. In reverse bias, most current was blocked and the LED stayed off."*

8. Return to the Circuit Evidence

Bring students back to the three Lesson 1 circuit states with multimeters attached in TinkerCAD Circuits:

- Baseline LED circuit
- Added diode with gray band toward ground
- Added diode with gray band toward the power source

Say:

> *"Now that we have a model of the P-N junction, let's check whether that model fits our evidence."*

Ask:

- Which circuit shows forward bias of the added diode?
- Which circuit shows reverse bias?

- What evidence shows that current flowed?
- What evidence shows that current was blocked?
- Why did the LED remain on in one case?
- Why did the LED turn off in the other?
- Why was the current lower when the added diode was conducting than in the baseline LED circuit?

Target Conclusion

> *"The added diode allowed significant current to flow in one orientation and blocked most current in the other. When the diode conducted, it had its own voltage drop, so less voltage was available across the resistor and LED compared to the baseline circuit. When the diode blocked current, nearly the full source voltage appeared across the diode. The LED and resistor had almost no voltage drop because almost no current was flowing through the loop."*

9. Documentation Work Time

Students now revise and extend their documentation using the documentation guide and are now provided with the peer-review checklist. Their goal is to make the explanations clear enough that another team could understand what was built, what was measured, and why the diode behaved differently when flipped.

Phase 1, Lesson 3 — Elaborate + Evaluate (Overview)

Lesson 3 Title

Technical Review: Can Others Verify Our Work?

Established Goals

Students finalize, review, and defend their technical documentation from the diode investigation. The goal is for students to demonstrate that they can clearly connect empirical circuit measurements to a conceptual explanation of diode behavior using the P-N junction model.

Through structured peer review, students evaluate whether another team's documentation is complete, evidence-based, technically accurate, and understandable to someone outside the original build team.

Understandings

Students will understand that:

- Technical work is not complete until it can be explained, verified, and reviewed by others.
- Strong engineering documentation uses evidence, not just claims.
- Screenshots, photos, voltage readings, current readings, diagrams, and written explanations must work together to tell a clear technical story.
- Peer review is a professional process for improving clarity, accuracy, and reliability.

- Revision is part of engineering practice, not a sign that the original work failed.
- A strong explanation of diode behavior must connect circuit evidence to the structure and function of a P-N junction.

Essential Questions

- Can another team understand what we built, measured, and concluded?
- Does our documentation prove our explanation with evidence?
- How do we know whether a technical explanation is complete, accurate, and clear?
- What makes peer review useful in engineering and technical work?
- How does the diode investigation prepare us to understand more complex semiconductor devices?

Evidence of Learning in Lesson 3

Students demonstrate understanding by completing and submitting a finalized technical documentation deck. Their documentation must show the three circuit conditions, measured voltage and current data, visual evidence from simulation or physical builds, and a revised explanation of diode behavior using accurate semiconductor vocabulary.

Students also complete multiple rounds of objective peer review using a shared checklist. During each review, they evaluate whether another team's documentation includes clear evidence, accurate vocabulary, logical explanation, and a connection between measured circuit behavior and the P-N junction model.

Between review cycles, teams use peer feedback to revise their own documentation. This creates evidence that students can interpret feedback, identify weaknesses in their technical communication, and improve their work before final submission.

Knowledge Transfer

Students will know

- Technical documentation must be clear enough for another person to verify.
- Evidence includes both visual documentation and measured data.
- Peer review is used to identify missing, unclear, or unsupported claims.
- A P-N junction diode can be explained through forward bias, reverse bias, current flow, and voltage drop.
- Engineering explanations become stronger when they are revised based on evidence and feedback.

Students will be able to

- Finalize a technical slide deck that connects circuit measurements to diode behavior.
- Use a peer-review checklist to evaluate another team's documentation objectively.
- Identify whether claims are supported by screenshots, measurements, diagrams, and accurate vocabulary.
- Revise their own documentation based on peer feedback.
- Explain how the diode investigation connects to future work with transistors and more complex semiconductor systems.

Lesson 3 Takeaway

Students move from building and explaining a diode circuit to defending their explanation through technical documentation and peer review. By the end of Lesson 3, students should understand that engineering knowledge must be visible, verifiable, and clear to others.

This closes Phase 1 by reinforcing that semiconductor devices are engineered materials that control electrical behavior. In Phase 2, students extend this understanding from a two-layer P-N junction diode to a three-layer transistor, where semiconductor structures are used to switch and control larger systems.

Closing Bridge to Phase 2

Bring the room back together to close out Phase 1.

Teacher Script

> *"You just built, measured, explained, revised, and defended the behavior of a P-N junction diode. You did more than prove that a diode has a 'right direction.' You showed that engineered semiconductor materials can control how current moves through a circuit. In Phase 1, we studied a two-region device: P-type material joined to N-type material. That P-N junction helped explain why the diode allowed current in one orientation and blocked most current in the other. In Phase 2, we will add another layer. Instead of a two-region diode, we move to a three-region transistor with an emitter, base, and collector. The question changes from, 'Why does this device allow current in one direction?' to 'How can a small electrical signal control a larger electrical behavior?' The circuits will become more complex, but the process stays the same: build carefully, measure what happens, use evidence to explain the behavior, revise when needed, and document clearly enough that someone else can verify your work."*

Supplemental Resources

Educational Videos

- Technology Size Comparison
- How do Transistors Build into a CPU?
- Cornell Mechatronics Course: Diode Lesson
- Diodes Explained – Engineering Mindset
- Transistors Explained – Engineering Mindset
- How Semiconductors Work – Ben Eater
- How a Transistor Works – Ben Eater
- How are Microchips Made? – Branch Education

Software Simulation

- TinkerCAD
- Wokwi Microcontroller and Circuit Simulation
- Crumb Sim

References

Bybee, R. W., Taylor, J. A., Gardner, A., Van Scotter, P., Powell, J. C., Westbrook, A., & Landes, N. (2006). *The BSCS 5E instructional model: Origins and effectiveness.* Colorado Springs, CO: BSCS.

Fosnot, C. T. (1996). Constructivism: A psychological theory of learning. In C. T. Fosnot (Ed.), *Constructivism: Theory, perspectives, and practice* (pp. 8–33). New York, NY: Teachers College Press.

Mehta, J., & Fine, S. (2019). *In search of deeper learning: The quest to remake the American high school.* Cambridge, MA: Harvard University Press.

Wiggins, G., & McTighe, J. (1998). *Understanding by design.* Alexandria, VA: Association for Supervision and Curriculum Development (ASCD).

Phase 1 Diode Investigation

Technical Documentation Guide

In this investigation, your team is trying to answer one main question:

Why does flipping a diode change the behavior of a circuit?

Your documentation should not just show that you completed the circuit. It should show how your thinking changed as you collected evidence, noticed patterns, tested predictions, and built a better explanation.

Slide 1

Baseline LED Circuit

Goal for this slide

Prove that your original LED circuit worked before the diode was added.

What this slide should prove

This slide shows the normal behavior of the circuit before you changed anything. This matters because later you need to compare the diode circuits to the original baseline.

Required Visuals and Data

Include:

- One clear screenshot or photo of the working baseline circuit
- Labels for:
  - power source
  - switch
  - resistor
  - LED
  - ground/negative rail
- Source voltage
- Voltage across the LED
- Voltage across the resistor
- Total current
- Clear note that the LED turned on

Required Writing

Answer these questions in complete sentences:

- What did the circuit do before the diode was added?
- What were the voltage readings?

- What was the current reading?
- Why is this circuit your baseline?

Must-Use Vocabulary

- baseline, circuit, LED, voltage, current

Sentence Starters

- “This is our baseline circuit because…”
- “Before the diode was added, the LED…”
- “The source voltage was…”
- “The voltage across the LED was…”
- “The voltage across the resistor was…”
- “The current reading shows…”
- “This baseline matters because…”

Peer Reviewer Question

Can another student clearly tell what the circuit did before the diode was added?

Slide 2

Diode Orientation 1: Gray Band Toward Negative Rail/Ground

Goal for this slide

Prove what happened when the diode was added with the gray band toward the negative rail/ground.

What this slide should prove

This slide shows the diode orientation where the LED is still turned on. It should prove that current still flowed, but the diode changed the voltage and current compared to the baseline circuit.

Required Visuals and Data

Include:

- One clear screenshot or photo of the circuit with the diode added
- Diode clearly labeled
- Gray band clearly visible
- Label showing “gray band toward negative rail/ground”
- Voltage across the diode
- Voltage across the LED
- Voltage across the resistor
- Total current

- Clear note explaining whether the LED turned on

Required Writing
Use Claim → Evidence → Explanation.
Your writing should explain:

- What happened to the LED
- Whether current flowed
- How the voltage readings changed compared to the baseline
- Why this setup was different from the original circuit

Must-Use Vocabulary

- diode, orientation, voltage, current, observation, evidence

Sentence Starters

- “In this version of the circuit, the gray band is…”
- “When we tested this setup, the LED…”
- “The current reading shows…”
- “The voltage across the diode was…”
- “Compared to the baseline circuit…”
- “This evidence shows that…”

Peer Reviewer Question
Can another student clearly tell which way the diode was facing and what happened to the circuit?

Slide 3

Diode Orientation 2: Gray Band Toward Positive Power Source

Goal for this slide
Prove what happened when the diode was flipped so the gray band faced the positive power source.

What this slide should prove
This slide shows that changing only the diode’s orientation changed the whole circuit. The LED turned off because the diode blocked most current in this setup.

Required Visuals and Data
Include:

- One clear screenshot or photo of the circuit with the diode flipped
- Diode clearly labeled

- Gray band clearly visible
- Label showing “gray band toward positive power source”
- Voltage across the diode
- Voltage across the LED
- Voltage across the resistor
- Total current
- Clear note explaining whether the LED turned on or stayed off

Required Writing

Use Claim → Evidence → Explanation.
Your writing should explain:

- What happened to the LED
- What happened to current
- Where most of the voltage appeared
- How this setup was different from the previous diode orientation

Must-Use Vocabulary

- diode, orientation, voltage, current, observation, evidence

Sentence Starters

- “In this version of the circuit, the gray band is…”
- “When the diode was flipped, the LED…”
- “The current reading shows…”
- “Most of the voltage appeared across…”
- “Compared to the other diode setup…”
- “This evidence shows that…”

Peer Reviewer Question

Can another student clearly tell that the diode was flipped and that this changed the circuit behavior?

Slide 4

Patterns in Our Circuit Data

Goal for this slide

Prove the pattern across all three circuit setups.

What this slide should prove

This slide should make the pattern easy to see. Instead of looking at one circuit at a time, you are comparing all three setups so you can explain what changed when the diode was added and flipped.

Required Visuals and Data

Create a clear comparison table with these three circuit states:

1. Baseline LED circuit
2. Diode with gray band toward negative rail/ground
3. Diode with gray band toward positive power source

Your table should include:

- Source voltage
- Diode voltage
- LED voltage
- Resistor voltage
- Total current
- LED behavior

Also include:

- One short note identifying a voltage pattern
- One short note identifying a current pattern
- One short note explaining what happened when current flowed
- One short note explaining what happened when current was blocked

Required Writing

Use Claim → Evidence → Explanation.

Your writing should explain:

- Which setup had the most current
- Which setup had no current or almost no current
- Where the voltage appeared when current was blocked
- How the diode changed the circuit compared to the baseline

Must-Use Vocabulary

- pattern, evidence, voltage, current, baseline, observation, prediction

Sentence Starters

- “A voltage pattern we noticed is…”
- “A current pattern we noticed is…”
- “When current flowed, the voltage was distributed across…”
- “When current was blocked, most of the voltage appeared across…”
- “Compared to the baseline circuit…”
- “This evidence suggests that…”

Peer Reviewer Question
Can another student clearly see the pattern across all three circuit states?

Slide 5

Testing Our Predictions Against Evidence

Goal for this slide
Use your evidence to decide which predictions were strong, which were incomplete, and which were not supported.

What this slide should prove
This slide shows that you are not just guessing. You are using measurements and observations to decide which explanations make sense.
Some predictions may match the data but still fail to explain why the diode behaved that way. Those predictions are not wrong, but they need a stronger explanation.

Required Visuals and Data
Create a table with at least 8 predictions from the class list.
Your table should include:

Category	Prediction	Evidence-Based Reasoning
Supported by Evidence		
Needs a Why		
Not Supported by Evidence		

You must include at least:

- 2 predictions that were supported by evidence
- 4 predictions that were partly right but incomplete
- 2 predictions that were not supported by evidence

Category Definitions

Supported by Evidence
The prediction matches what your circuit showed and uses reasonable evidence.
Example:
“The diode has polarity like an LED.”

Needs a Why
The prediction matches the pattern but does not fully explain what caused it.

Example:
“The diode only lets electricity go one way.”
This is partly right, but it does not explain the P-N junction, forward bias, or reverse bias.

Not Supported by Evidence
The prediction does not match the data, uses inaccurate language, or is not grounded in reality.
Example:
“The diode converts electricity into vibes.”

Required Writing
For each prediction, explain why you placed it in that category.
Your reasoning should mention at least one type of evidence:

- LED behavior
- current reading
- voltage reading
- diode orientation
- comparison to baseline

Must-Use Vocabulary

- prediction, evidence, supported, incomplete, revision

Sentence Starters

- “We placed this prediction in this category because…”
- “Our evidence supports this part because…”
- “This prediction is partly right because…”
- “This prediction still needs a why because…”
- “This prediction is not supported because…”
- “The data shows…”

Peer Reviewer Question
Can another student tell that your team used evidence instead of opinion to sort the predictions?

Slide 6

Our First Theory of the P-N Junction

Goal for this slide
Use diagrams to make your first theory about what might be happening inside the diode.

What this slide should prove

This slide shows your team trying to explain the hidden structure inside the diode. You are not expected to have the perfect explanation yet. This is your first theory based on the diagrams. Write this clearly on the slide:

This is our first theory, not our final explanation.

Required Visuals and Data

Include:

- One diagram showing P-type material and N-type material
- Labels for:
  - P-type region
  - N-type region
  - P-N junction
  - holes
  - electrons
- One short theory explaining what might happen where the two regions meet
- One connection back to your Lesson 1 circuit evidence

Required Writing

Answer these questions:

- What do you notice about the P-type side?
- What do you notice about the N-type side?
- What do you think happens where they meet?
- How might this explain why the diode behaved differently when flipped?

Must-Use Vocabulary

- P-type, N-type, P-N junction, holes, electrons, semiconductor, theory, model

Sentence Starters

- “The P-type side appears to have…”
- “The N-type side appears to have…”
- “At the P-N junction, we think…”
- “This might explain our circuit because…”
- “This model helps explain why…”
- “One question we still have is…”

Peer Reviewer Question

Can another student understand your first theory about what might be happening inside the diode?

Slide 7

How the P-N Junction Explains Our Circuit Data

Goal for this slide

Use the correct technical model to explain why the diode behaved differently when flipped.

What this slide should prove

This slide connects your circuit evidence to the inside structure of the diode. This is where you move from “the diode only lets current go one way” to a stronger explanation using P-type material, N-type material, the P-N junction, forward bias, and reverse bias.

Required Visuals and Data

Include:

- One simple diagram of a diode showing:
  - P-type region
  - N-type region
  - P-N junction
  - anode
  - cathode
- A label showing that the gray band marks the cathode side
- A simple visual or label showing:
  - forward bias
  - reverse bias
- One direct connection to your team’s voltage and current data

Required Writing

Use Claim → Evidence → Explanation.
Your explanation should include:

- What a standard silicon diode is made from
- What the P-N junction is
- What happened in forward bias
- What happened in reverse bias
- Which data from your circuit supports that explanation

Must-Use Vocabulary

- semiconductor
- P-type
- N-type

- P-N junction
- anode
- cathode
- forward bias
- reverse bias
- current
- voltage drop

Sentence Starters

- “A diode is different from a wire because…”
- “The diode is made from…”
- “The P-N junction helps explain why…”
- “In forward bias…”
- “In reverse bias…”
- “Our data supports this because…”
- “This model matches our evidence because…”

Peer Reviewer Question

Can another student understand how the P-N junction explains the voltage, current, and LED behavior in your circuit?

Slide 8

Revised Explanation and Final Conclusion

Goal for this slide

Show how your explanation improved from your first prediction to your final understanding.

What this slide should prove

This slide proves that your team learned from the evidence. It should show what you originally thought, what your data supported, what needed revision, and what you now understand about diode behavior.

Required Visuals and Data

Include one clear summary visual.
This could be:

- a flowchart from observation → evidence → pattern → P-N junction explanation
- a compact table showing what changed, what stayed the same, and what it means

- the three circuit states arranged side by side with the final explanation underneath

Also include four written sections:

1. Original Prediction

What did your team originally think after Lesson 1?

2. What Was Supported

What part of your original thinking matched the evidence?

3. What Needed Revision

What part was incomplete or inaccurate?

4. Final Explanation

Why did flipping the diode change the circuit behavior?

Required Writing

Your final explanation should answer:

- Why did current flow in one diode orientation?
- Why was most current blocked in the other orientation?
- How does the P-N junction explain this?
- Why is “the diode only lets electricity go one way” partly right but incomplete?

Must-Use Vocabulary

- conclusion
- evidence
- diode
- semiconductor
- P-N junction
- forward bias
- reverse bias
- revised explanation

Sentence Starters

- “Our original prediction was…”
- “The part that was supported by evidence was…”
- “The part that needed revision was…”
- “Our final explanation is that…”
- “The diode behaved differently when flipped because…”
- “The phrase ‘electricity only goes one way’ is incomplete because…”
- “This matters in electronics because…”

Peer Reviewer Question

Can another student clearly see how your explanation changed and became more accurate?

Appendix Slide

Individual Evidence and Reflection

Goal for this slide

Show what you personally understand about the diode investigation.

What this slide should prove

This slide proves that each person understands the investigation individually. It is not enough for the team deck to be complete. Each student needs to show their own evidence, reflection, and revised understanding.
Each student completes one individual appendix slide.

Required Visuals and Data

Each student includes:

- One baseline circuit screenshot or photo
- One diode setup with the gray band toward the positive power source
- One diode setup with the gray band toward the negative rail/ground
- At least one measurement or observation
- One brief personal reflection
- One sentence explaining how their thinking changed

Reflection Prompts

Answer at least three:

- What do you understand now about diode orientation that was not clear before?
- Which measurement helped that idea become clearer?
- What part of your original prediction was supported?
- What part of your original prediction needed revision?
- How does the P-N junction help explain what happened in the circuit?
- What did you personally help build, measure, fix, or explain?

Must-Use Vocabulary

- baseline
- diode
- orientation
- evidence
- measurement
- reflection

- revision
- P-N junction

Sentence Starters

- “In my baseline circuit…”
- “When the gray band was toward the positive power source, I noticed…”
- “When the gray band was toward the negative rail/ground, I noticed…”
- “One measurement that helped me was…”
- “One idea that became clearer to me was…”
- “My original thinking changed because…”
- “One thing I personally helped with was…”

Peer Reviewer Question

Can another student tell what this individual student understands, not just what the team completed?

Final Self-Check Before Peer Review

Before your team submits the deck for peer review, check each slide using these questions:

1. **Is the circuit easy to see?**
   Screenshots/photos should be clear, not tiny or blurry.

2. **Are important parts labeled?**
   A reviewer should not have to guess where the diode, resistor, LED, source, or ground are.

3. **Are measurements included?**
   Voltage and current readings should be visible and connected to your explanation.

4. **Does each slide prove something?**
   Do not just place a screenshot on the slide. Explain what the screenshot proves.

5. **Did you use evidence, not guesses?**
   Your claims should connect to observations, measurements, or diagrams.

6. **Did you revise your original thinking?**
   Your final explanation should be stronger than your first prediction.

7. **Did you explain why “the diode only lets electricity go one way” is incomplete?**
   A strong explanation connects diode behavior to the P-N junction, forward bias, and reverse bias.

8. **Could another team verify your work?**
   Your documentation should be clear enough that another team can understand what you built, measured, concluded, and revised.

Peer Review Checklist: Phase 2 Car Fabrication

Reviewer: _____ Builder/Team: _____

Place a check in the box if the answer is: "YES, that's definitely true."

All Checkboxes are worth 10 pts each. The Final Verdict is worth 50.

All vocabulary words must be underlined (first time) and used accurately.

1. Slide 1 — Baseline Circuit

- Shows a working baseline circuit with source, switch, resistor, and LED labeled.
- Shows conventional current, electron flow, and voltage drop across the LED.
- Writing explains how the baseline circuit works and why the LED turns on.
- Writing uses the required vocabulary and explains why this baseline matters for the investigation.

Required vocabulary: baseline, circuit, LED, voltage, current

---

2. Forward Bias: Gray Band Toward Negative Ground

- Shows the diode added with the gray band oriented toward negative ground.
- Slide includes voltage across the diode, across the LED, across the resistor, total current, and LED behavior.
- Writing explains the diode orientation, what the LED did, and one important observation from testing.
- Writing uses the required vocabulary accurately.

Required Vocabulary: diode, orientation, voltage, current, observation, evidence

---

3. Reverse Bias: Gray Band Toward Positive Source

- Shows the diode flipped with the gray band toward the positive power source.
- Shows voltage across the diode and voltage across the LED.
- Writing explains the diode orientation, what the LED did, and how this differed from the other orientation.
- Writing uses the required vocabulary accurately.

Required vocabulary: diode, orientation, voltage, current, observation, evidence

---

4. Patterns in Our Circuit Data

- Slide includes a clear comparison table for all three circuit states: baseline, gray band toward ground, and gray band toward positive power source.
- Table includes source voltage, diode voltage, LED voltage, resistor voltage, total current, and LED behavior.
- Writing uses vocabulary and identifies a voltage pattern and current pattern across the three circuit states.

Required vocabulary: pattern, evidence, voltage, current, baseline, observation, prediction

---

5. Testing Our Predictions Against Evidence

- Slide includes at least 8 class predictions sorted into the categories: Supported by Evidence, Needs a Why, and Not Supported by Evidence.
- Team includes at least 2 supported predictions, 4 incomplete predictions, and 2 predictions that are not supported by evidence.
- Reasoning explains why each prediction belongs in its category using measurements, observations, or circuit behavior.

Required vocabulary: prediction, evidence, supported, incomplete, revision.

---

6. Our First Theory of the P-N Junction

- Slide includes a diagram showing P-type material, N-type material, and the P-N junction.
- Slide labels holes, electrons, P-type region, N-type region, and the junction clearly.
- Writing uses vocabulary and explains the team's first theory about what might be happening inside the diode and connects that theory to the circuit evidence.

Required vocabulary: P-type, N-type, P-N junction, holes, electrons, semiconductor, theory, model

---

7. How the P-N Junction Explains Our Circuit Data

- Slide includes a diode diagram labeled with P-type region, N-type region, P-N junction, anode, and cathode.
- Slide clearly shows or explains forward bias and reverse bias.
- Writing connects the P-N junction model to the team's voltage, current, and LED evidence from the circuit.

Required vocabulary: semiconductor, P-type, N-type, P-N junction, anode, cathode, forward bias, reverse bias, current, voltage drop

---

8. Revised Explanation and Final Conclusion

- Slide includes a clear summary visual, comparison table, and side-by-side circuit summary.
- Slide includes all four sections: Original Prediction, What Was Supported, What Needed Revision, and Final Explanation.
- Final explanation clearly explains why “the diode only lets electricity go one way” is partly right but incomplete.

Required vocabulary: conclusion, evidence, diode, orientation, forward bias, reverse bias, semiconductor, revised explanation.

---

9. Appendix — Individual Evidence and Reflection Slides

Each teammate must complete their own individual appendix slide.

- Each teammate includes a baseline circuit image and both diode orientations they built in TinkerCAD.
- Each teammate includes at least one specific measurement or observation from testing.
- Each teammate writes a reflection that explains what they personally understand now, what became clearer, or how their thinking changed.

Required vocabulary: baseline, diode, orientation, evidence, measurement, reflection, revision, P-N junction

---

Final Verdict

- **This team created a strong technical explanation.**

They documented their circuit evidence clearly, compared both diode orientations, tested predictions against evidence, connected the P-N junction model to their measurements, revised their thinking, and made their work understandable to another team. (50 Points)

- **This team is not yet finished. (greater than 5 unchecked boxes)**

Total Score: _____ / 350

(Link to printable copy of checklist)